Operator Subsystem
Non-Real Time Computer
Sea Based

TCS NRT HARDWARE DESIGN

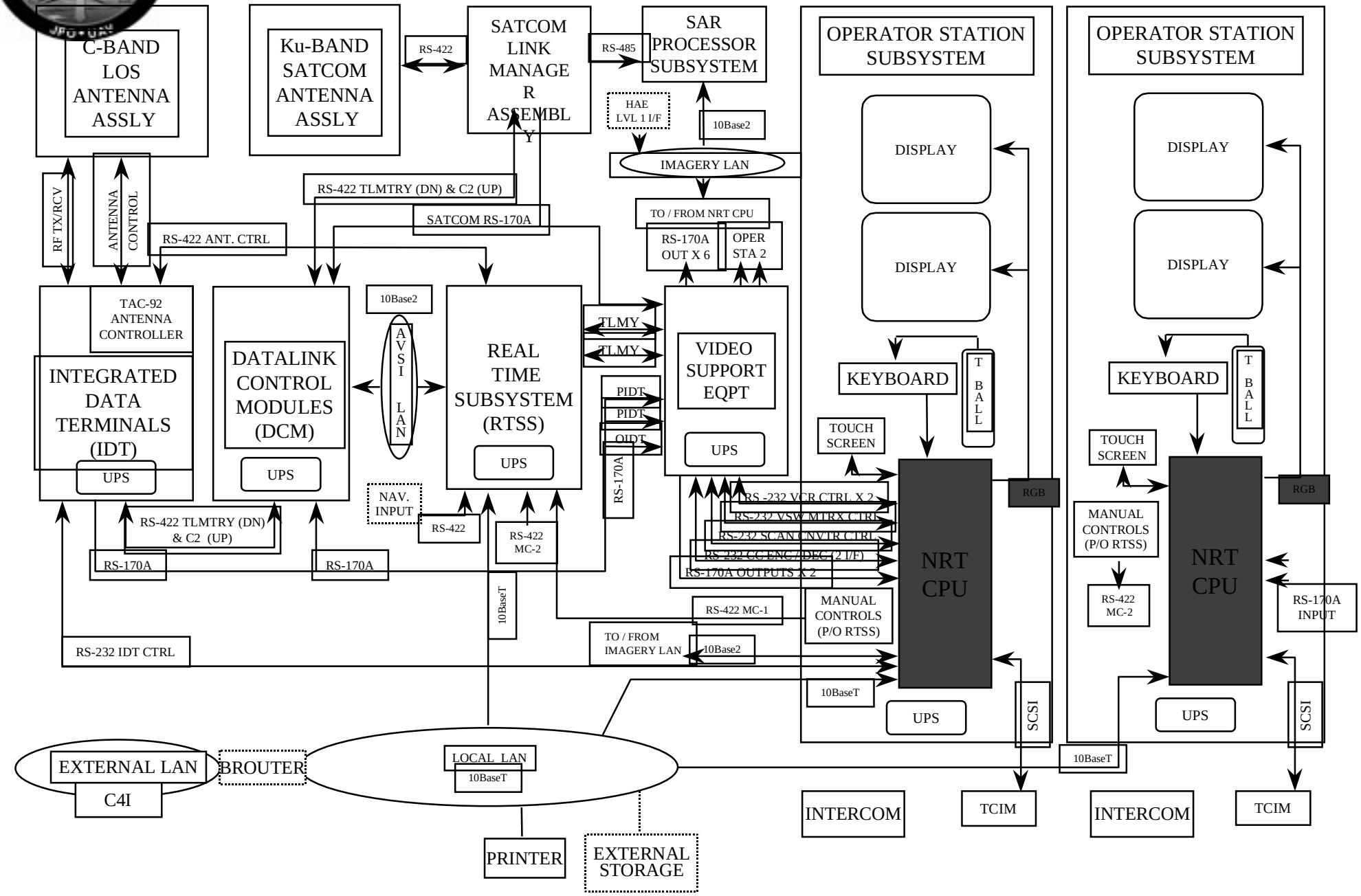

NON-REAL TIME COMPUTER(TAC-4) HWCI REQUIREMENT TO EB ALLOCATION

- REQUIREMENTS MATRIX SUMMARY
  - 39 Total Requirements
  - HWCI Requirements to EB Allocation
    - 62 With EB1
    - 24 With EB2
    - 18 With EB3
    - 8 With EB4

NON-REAL TIME COMPUTER(TAC-4) OPERATIONAL ENVIRONMENTAL CONSIDERATIONS

- Compatible with Commercial Red Standards
  - Red: Combat with Severe Temperature and Shock Extremes
- Required to Meet the Following MIL-STDs
  - MIL-S-901D Shock Tests
  - MIL-STD-167-1 Shipboard Vibration
  - MIL-STD-810E Temperature/Humidity

NON-REAL TIME COMPUTER(TAC-4)
ELECTROMAGNETIC COMPATIBILITY CONSIDERATIONS

- Electromagnetic Interference (EMI), Emissions
  - Required to Meet RE101, 102, CE101 and 102 in Accordance with MIL-STD-461 for Surface Ship and Submarines
  - Tested in Accordance with MIL-STD-462
- Electromagnetic Interference (EMI), Susceptibility
  - Required to Meet CS101 and RS101 in Accordance with MIL-STD-461 for Surface Ships and Submarines
  - Tested in Accordance with MIL-STD-462

NON-REAL TIME COMPUTER(TAC-4) HWCI PRELIMINARY DESIGN DESCRIPTION

- The NRT Computer HWCI will provide the Processing Capacity which allows TCS to perform TCS functionality to include but not limited to: Mission Planning, Mission Control and Monitoring, Payload Processing, Targeting and C4I Interfacing.
- The ship based NRT computer will utilize a HP 9000 J-Class Workstation, Model J210. This workstation is enclosed in a shock mounted, ruggedized 72” rack developed for ship board applications.

NON-REAL TIME COMPUTER(TAC-4) HWCI OVERVIEW/DESCRIPTION OF OPERATION

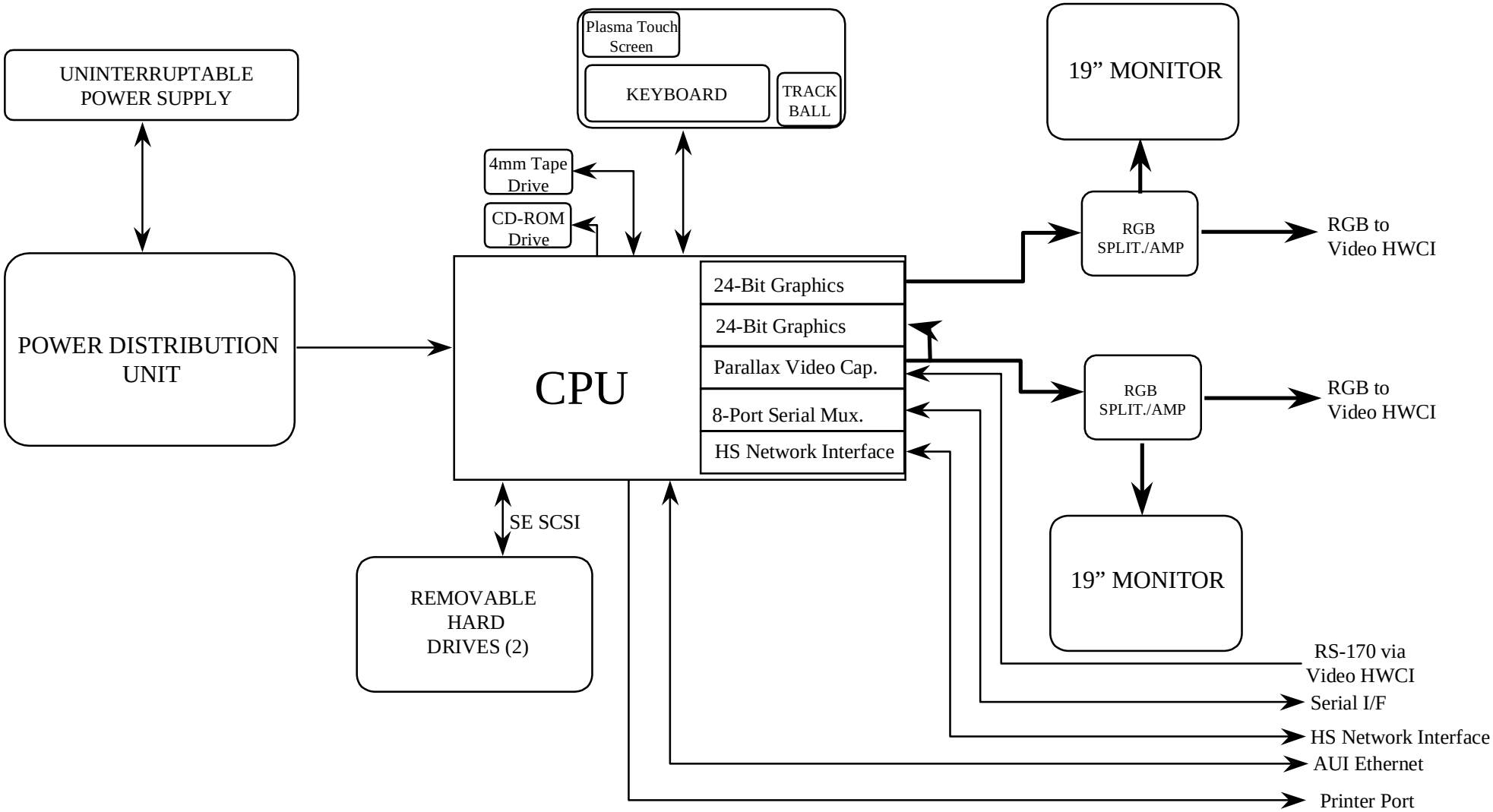

NON-REAL TIME COMPUTER(TAC-4) HWCI OVERVIEW/DESCRIPTION

HWCIs:

- **120 MHz PA-RISC 7200**
- **320 MB RAM**
- **2, 1 GB Internal FW SCSI**
- **4x CD-ROM**
- **4mm Tape Drive**
- **Parallax Video Interface**
- **AUI LAN Interface**
- **External SE SCSI Interface**
- **8 RS-232 Ports**
- **Parallel Printer Port**
- **Trackball**
- **Keyboard**
- **Plasma Touch Screen**
- **Dual Removable Hard Drives**
- **19” High Resolution Monitors**
- **HS Network Interface**

NON-REAL TIME COMPUTER(TAC-4) HWCI INTERFACES

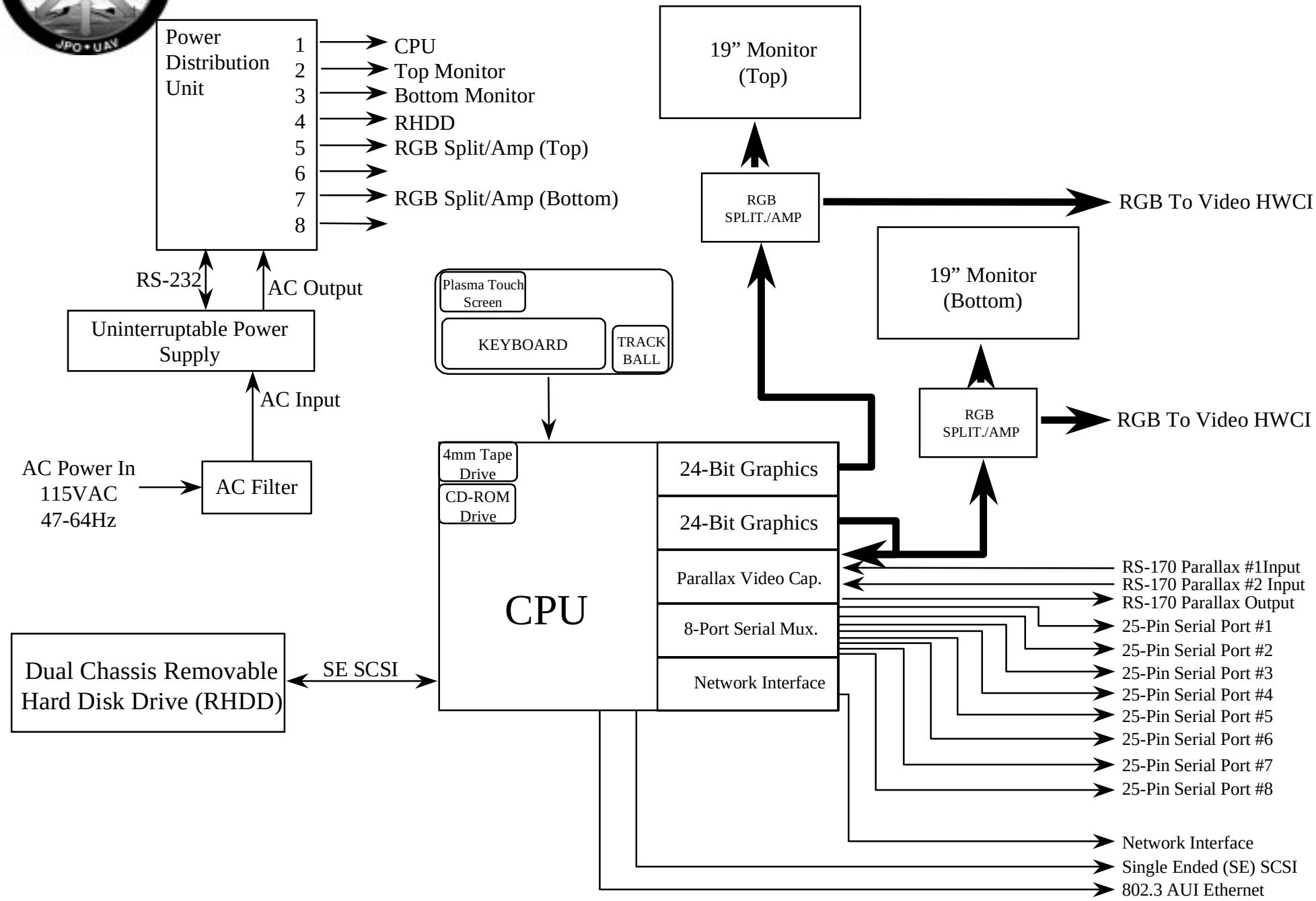

NON-REAL TIME COMPUTER(TAC-4) HWCI INTERFACES EXTERNAL I/O

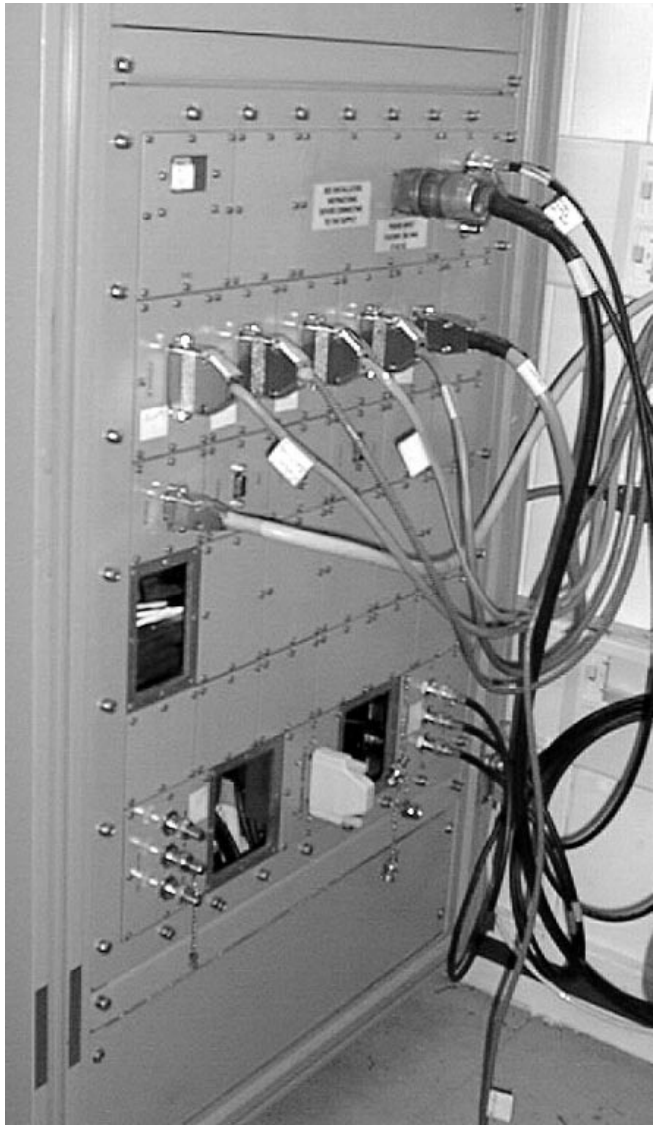

TAC-4 I/O Panel

- Video I/O
  - RGB Outputs
  - 2 RS-170 Inputs
  - 1 RS-170 Ouput
- LAN Connectivity
  - AUI
- Serial Ports
  - 8 Selectable 25-Pin Ports
- Power
  - 120v, 60Hz

NON-REAL TIME COMPUTER(TAC-4)
PRELIMINARY DESIGN DRAWINGS

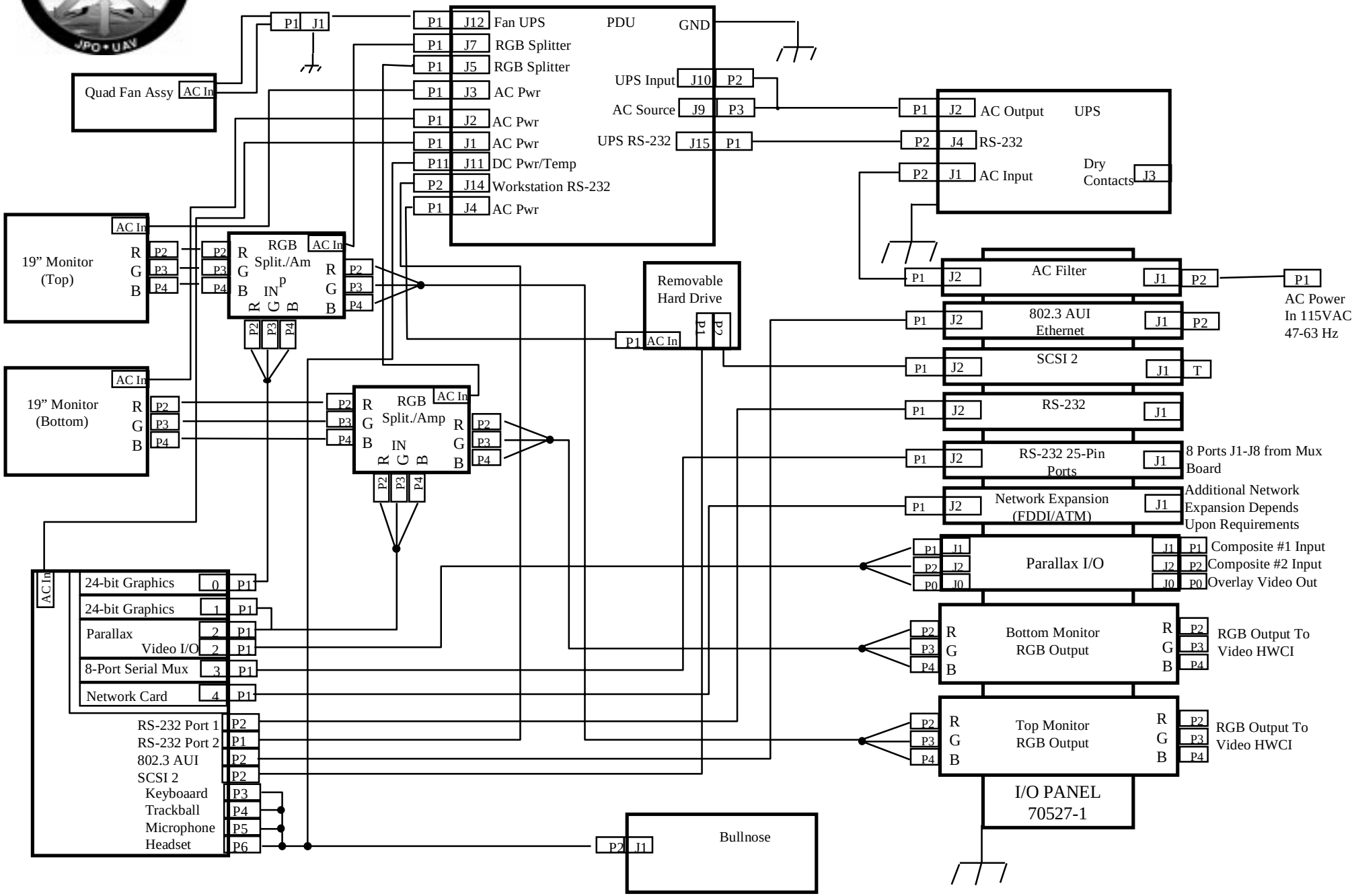

NON-REAL TIME COMPUTER(TAC-4) IDENTIFICATION OF COTS/NDI ITEMS

- COTS Equipment
  - Extron ADA 300 RGB Splitter/Amp
- NDI Equipment
  - TAC-4 Contract Components

NON-REAL TIME COMPUTER(TAC-4) PACKAGING IDENTIFICATION

- Commercially Ruggedized to Environmental Red Standards
  - Red: Shipboard and Submarine combat. Intended for combat situations where survival of mission critical systems is paramount.

NON-REAL TIME COMPUTER(TAC-4) PHYSICAL DATA

- Physical Data Applies for One Console
  - Height = 72 inches
  - Width = 24 inches
  - Depth = 32 inches (Additional 18.5” with Bullnose)
  - Weight = 875 lb. Fully Configured

NON-REAL TIME COMPUTER(TAC-4) POWER REQUIREMENTS

- Equipped with Uninterruptable Power Supply (UPS)
  - Input Power of 115/230 VAC at 47-64 Hz
  - Provides On-Line Conditioned 115 VAC with Battery Backup
  - Rated at 15min Backup Power at 1500W
- Power Distribution Unit (PDU)
  - Receives Input from UPS
  - Provides Eight 115VAC/15A Receptacles
  - Provides +5 and +12 V

NON-REAL TIME COMPUTER(TAC-4) POWER MEASUREMENTS

No.	Qty	Item	Part Number/ Model Number	Vendor	Pwr (W)	Measured Values				Notes
						Amp (P)	Amp (O)	V	W (est.)	
9	1	TAC-4 Workstation	J210	Hewlett Packard		7.50	7.40	116.90	865.06	
9a	1	Workstation Upper Monitor	PN 91567-001	SAIC		*2.40/1.00	0.70	116.00	81.20	*Cold/Warm Monitor
9b	1	Workstation Lower Monitor	PN 91567-002	SAIC		*2.80/1.00	0.80	116.00	92.80	*Cold/Warm Monitor
9c	2	RGB/Amp Splitters	SN #339500, SN #337475	Extron		0.10	0.10	116.30	11.63	For Both Splitters
9d	1	Processor Unit		Hewlett Packard	660.00	1.80	1.80	116.00	208.80	
9e	1	Removable Hard Drives	PN 508388-0100	Hewlett Packard		0.20	0.10	116.30	11.63	
9f	1	Exhaust Fan Assembly (4)		Hewlett Packard		1.00	0.90	11.46	10.31	
9g	1	Flat Panel Touch Screen		SAIC		3.00	2.00	12.00	24.00	
9g	1	Flat Panel Touch Screen		SAIC		3.00	2.00	5.00	10.00	

Legend: p = peak amps on startup
o = operating amps
w = Watts

NON-REAL TIME COMPUTER(TAC-4) POWER BACKUP

- Total Power Utilized (measured)
  - 865.06 Watts Overall
- UPS Rated for 15 min @ 1500 Watts
  - 26 min Backup Time for Measured Power Usage

NON-REAL TIME COMPUTER(TAC-4) IDENTIFICATION OF SUPPORT EQUIPMENT

- NO SPECIALIZED MAINTENANCE EQUIPMENT OR MATERIALS REQUIRED TO MAINTAIN EQUIPMENT

NON-REAL TIME COMPUTER(TAC-4) REQUIREMENTS ALLOCATED TO HWCI

Requirement	19" Mon.	120MHz PA-RISC 7200	2, 1GB FW SCSI (internal)	4mm Tape Drive	RHDD	Parallax	10BaseT (AUI)	HS NET. CRD	SE SCSI (ext.)	RS-170/ RGB I/0	Printer Port	8-Port Serial Mux	4x CD ROM	touch screen	keyboard trkball,	320Mb RAM	R/W CD ROM
SSDD159	1														1		
SSDD160		1	1	1		1	1	3	1		1	2	1		1	1	
SSDD161					5												
SSDD162							1	3									
SSDD163							1		1		1	2					
SSDD164																	5
SSDD165				1													
SSDD166				1	1								1				
SSDD167	1												1		1		
SSDD168		5															
SSDD169		5															
SSDD170					5												
SSDD171																5	
SSDD172				1			1						1				
SSDD176						1				2						1	
SSDD604							5										
SSDD649		5															
SSDD659							1	3									
SSDD661							1	3									
SSDD663							1	3									
SSDD665							1	3									
SSDD677	1											2					
SSDD681										2							
SSDD724(1)											1						
SSDD724(2)							1										
SSDD724(6)							1	3									
SSDD724(7)							1					2					
SSDD724(8)												2					
SSDD724(9)							1										

NON-REAL TIME COMPUTER(TAC-4) REQUIREMENTS ALLOCATED TO HWCI

Requirement	19" Mon.	120MHz PA-RISC 7200	2, 1GB FW SCSI (internal)	4mm Tape Drive	RHDD	Parallax	10BaseT (AUI)	HS NET. CRD	SE SCSI (ext.)	RS-170/ RGB I/0	Printer Port	8-Port Serial Mux	4x CD ROM	touch screen	keyboard trkball,	320Mb RAM	R/W CD ROM
SSDD725(1)								3									
SSDD725(2)											1						
SSDD725(3)							1			2		2					
SSDD725(4)										2		2					
SSDD725(6)							1										
SSDD725(7)							1	3				2					
SSDD725(9)							1	3									
SSDD725(16)							1	3	1								
SSDD725(21)				1	1		1	3		2	1	2					
SSDD725(22)														3	1		
SSDD726							1	3									
SSDD769							1	3				2					
SSDD770							1	3				2					
SSDD772											1						
SSDD773											1						
SSDD775						1				2		2					
SSDD776							1			2		2					
SSDD777										2		2					
SSDD778												2					
SSDD782							1										
SSDD784							1					2					
SSDD788							3										
SSDD807							1	5	1								