# OPERATOR STATION SUBSYSTEM
# OPERATOR INPUT/OUTPUT HWCIs
# SEA BASED

# REQUIREMENTS ALLOCATED TO HWCI

- REQUIREMENTS MATRIX SUMMARY
  - 13 Total SSDD Requirements
  - HWCI Requirements Met With Following Builds
    - 10 With EB1
    - 8 With EB2
    - 1 With EB3
    - 6 With EB4
    - 12 With EB5

# TCS I/O HARDWARE DESIGN

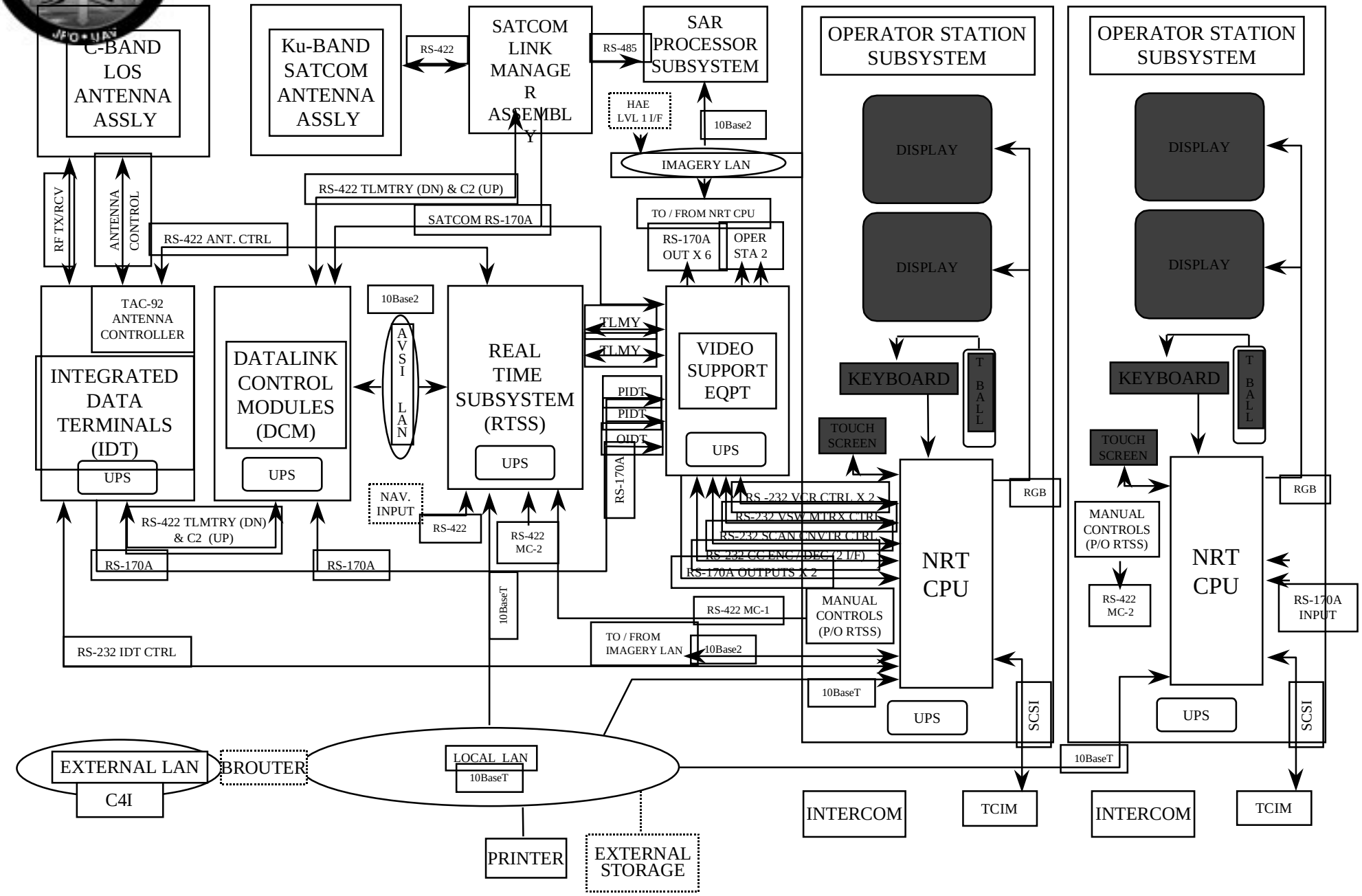

# OPERATIONAL ENVIRONMENTAL CONSIDERATIONS

- Equipment Installed in Ruggedized rack.
- Compatible with Commercial Red Standards
  - Red: Combat with Severe Temperature and Shock Extremes
- Required to Meet the Following MIL-STDs
  - MIL-S-901D Shock Tests
  - MIL-STD-167-1 Shipboard Vibration
  - MIL-STD-810E Temperature/Humidity

# ELECTROMAGNETIC COMPATIBILITY CONSIDERATIONS

- Equipment Installed in Ruggedized rack.
- Electromagnetic Interference (EMI), Emissions
  - Required to Meet RE101, 102, CE101 and 102 in Accordance with MIL-STD-461 for Surface Ship and Submarines
  - Tested in Accordance with MIL-STD-462
- Electromagnetic Interference (EMI), Susceptibility
  - Required to Meet CS101 and RS101 in Accordance with MIL-STD-461 for Surface Ships and Submarines
  - Tested in Accordance with MIL-STD-462

# HWCI PRELIMINARY DESIGN DECISION

- The Operator Output HWCI provides the necessary hardware to allow TCS operators to receive information from the NRT computer HWCI
- The Operator Input HWCI provides the necessary hardware to allow TCS operators to input information to the NRT computer HWCI

# OVERVIEW/DESCRIPTION OF HWCI OPERATION

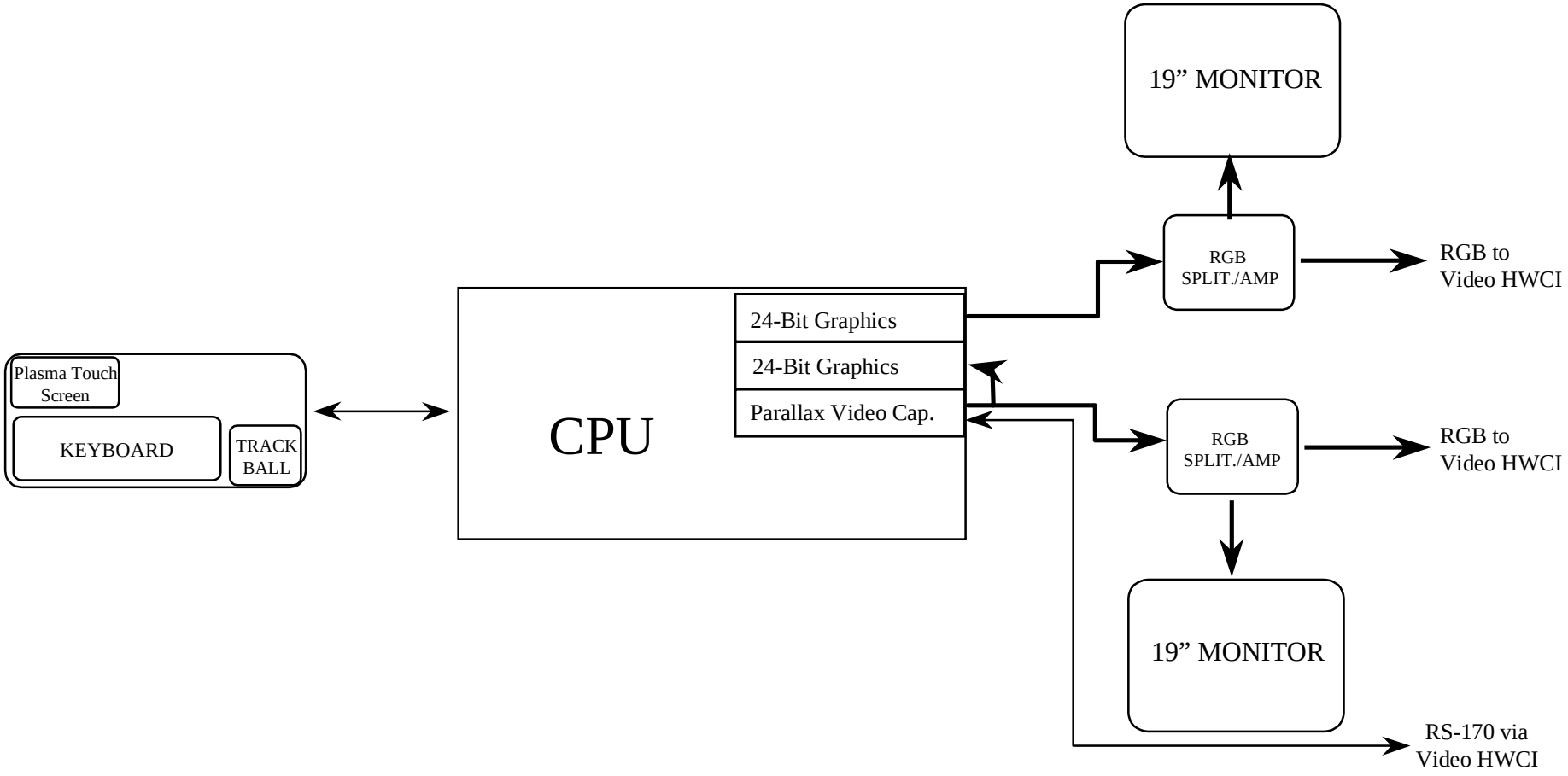

# CURRENT OPERATOR I/O HWCI

**HWCIs:**

- **19” High Resolution Monitors**
- **Trackball**
- **Keyboard**
- **Plasma Touch Screen**
- **Parallax Video Interface**
- **RGB Splitter/Amps**

# HWCI INTERFACES EXTERNAL/INTERNAL

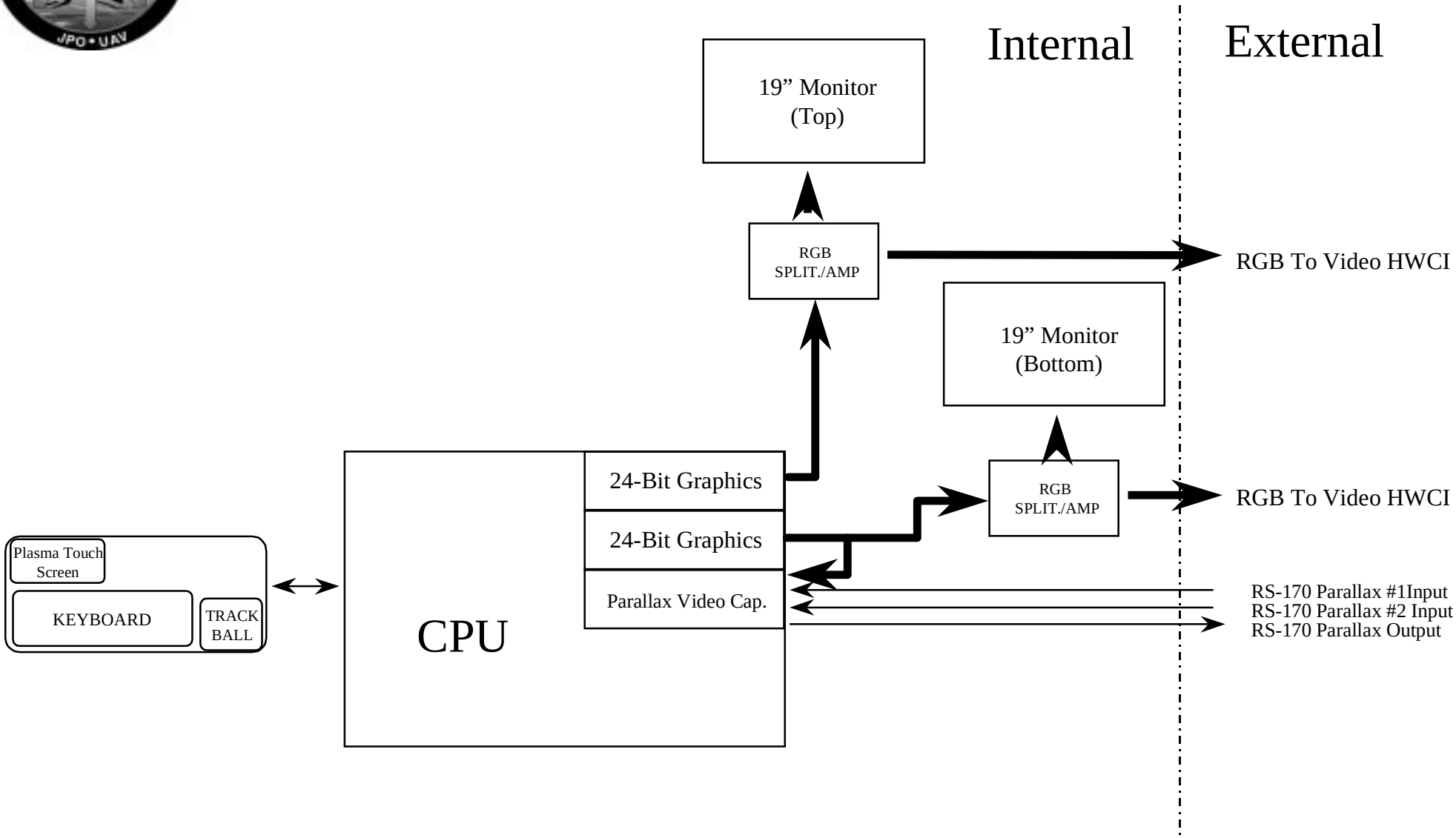

# PRELIMINARY DESIGN DRAWINGS

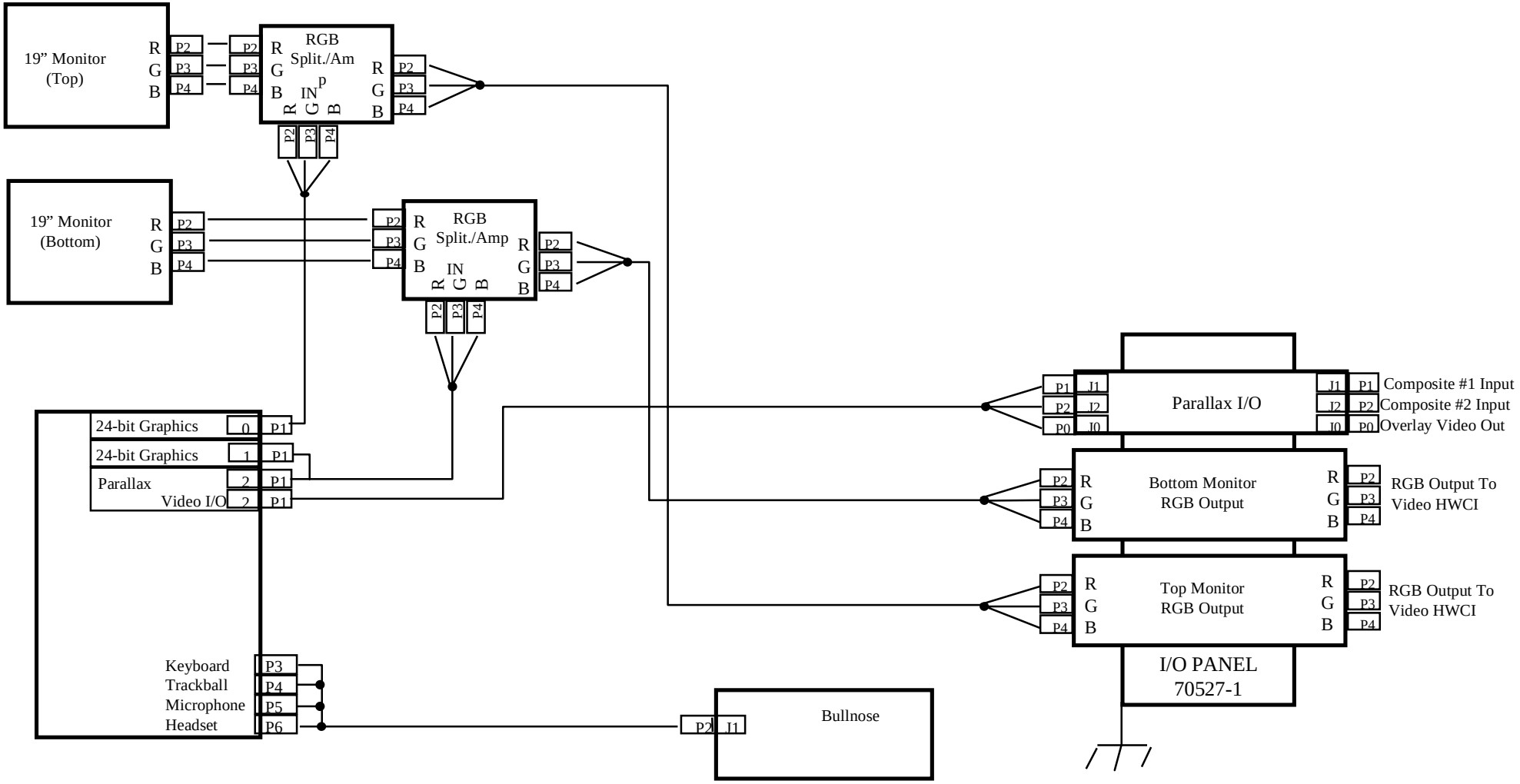

# IDENTIFICATION OF COTS/NDI ITEMS

- COTS Equipment
  - Extron ADA 300 RGB Splitter/Amp
- NDI Equipment
  - TAC-4 Contract Components
    - Bullnose
    - Monitors

# PACKAGING IDENTIFICATION

- Commercially Ruggedized to Environmental Red Standards
  - Red: Shipboard and Submarine combat. Intended for combat situations where survival of mission critical systems is paramount.

# PHYSICAL DATA

- **19” Rack Mounted Monitors**
  - **Height = 15.50 inches**
  - **Width = 19.00 inches**
  - **Depth = 20.75 inches**
  - **Weight = 91.00 lb. Each**
- **Bullnose**
  - **Height = 5.50 inches**
  - **Width = 24.00 inches**
  - **Depth = 18.50 inches**
  - **Weight = 20.00 lb. Each**
- **RGB Splitter/Amplifier**
  - **Height = 1.75 inches**
  - **Width = 4.63 inches**
  - **Depth = 4.75 inches**
  - **Weight = 1.00 lb. Each**

# POWER REQUIREMENTS

- Power Supplied via UPS
  - 19” Monitors
    - 115 VAC at 60 Hz
    - 1.0 a, 120 Watts
  - Bullnose
    - +5 and +12 Volts
    - 3.0 a
  - RGB Splitter/Amplifier
    - 115 VAC at 60Hz Converted to 9V
    - .50 a, 2 Watts

# POWER MEASUREMENTS

| Item | Vendor | Unit Amp (P) | Unit Amp (O) | Unit V | Unit VA (O) | Notes |
|---|---|---|---|---|---|---|
| Workstation Upper Monitor | SAIC | *2.40/1.00 | 0.70 | 116.00 | 81.20 | *Cold/Warm Monitor |
| Workstation Lower Monitor | SAIC | *2.80/1.00 | 0.80 | 116.00 | 92.80 | *Cold/Warm Monitor |
| RGB/Amp Splitters | Extron | 0.10 | 0.10 | 116.30 | 11.63 | For Both Splitters |
| Bullnose | SAIC | 3.00 | 2.00 | 12.00 | 24.00 | |
| Bullnose | SAIC | 3.00 | 1.00 | 5.00 | 5.00 | |

p = peak amps on startup

o = operating amps

w = Watts

# IDENTIFICATION OF SUPPORT EQUIPMENT

- NO SPECIALIZED MAINTENANCE EQUIPMENT OR MATERIALS REQUIRED TO MAINTAIN EQUIPMENT

# REQUIREMENTS ALLOCATED TO HWCI

| Requirement | (4) 19" Mon. | (4) 24-Bit Graphics | Touch Screen / Joystick | Keyboard/ Trackball | 10BaseT (AUI) | 8-Port Serial Mux |
|---|---|---|---|---|---|---|
| SSDD184 | | | | 1 | 1 | 2 |
| SSDD185 | 5 | 5 | 5 | 5 | 5 | 5 |
| SSDD186 | 1 | 2 | | | | |
| SSDD187 | 1 | 2 | | | | |
| SSDD188 | 2 | 2 | | | | |
| SSDD189 | | 2 | | | | |
| SSDD190 | 2 | 2 | | | | |
| SSDD192 | | | 3 | 1 | | |
| SSDD193 | 5 | 5 | 5 | 5 | 5 | 5 |
| SSDD194 | | | | 1 | | |
| SSDD195 | 4 | 4 | 4 | 4 | 4 | 4 |
| SSDD197 | | | 1 | 1 | | |
| SSDD198 | | | 1 | 1 | | |