Operator Station Subsystem
Operator Input/Output HWCIs
Landbased

TCS I/O HARDWARE DESIGN

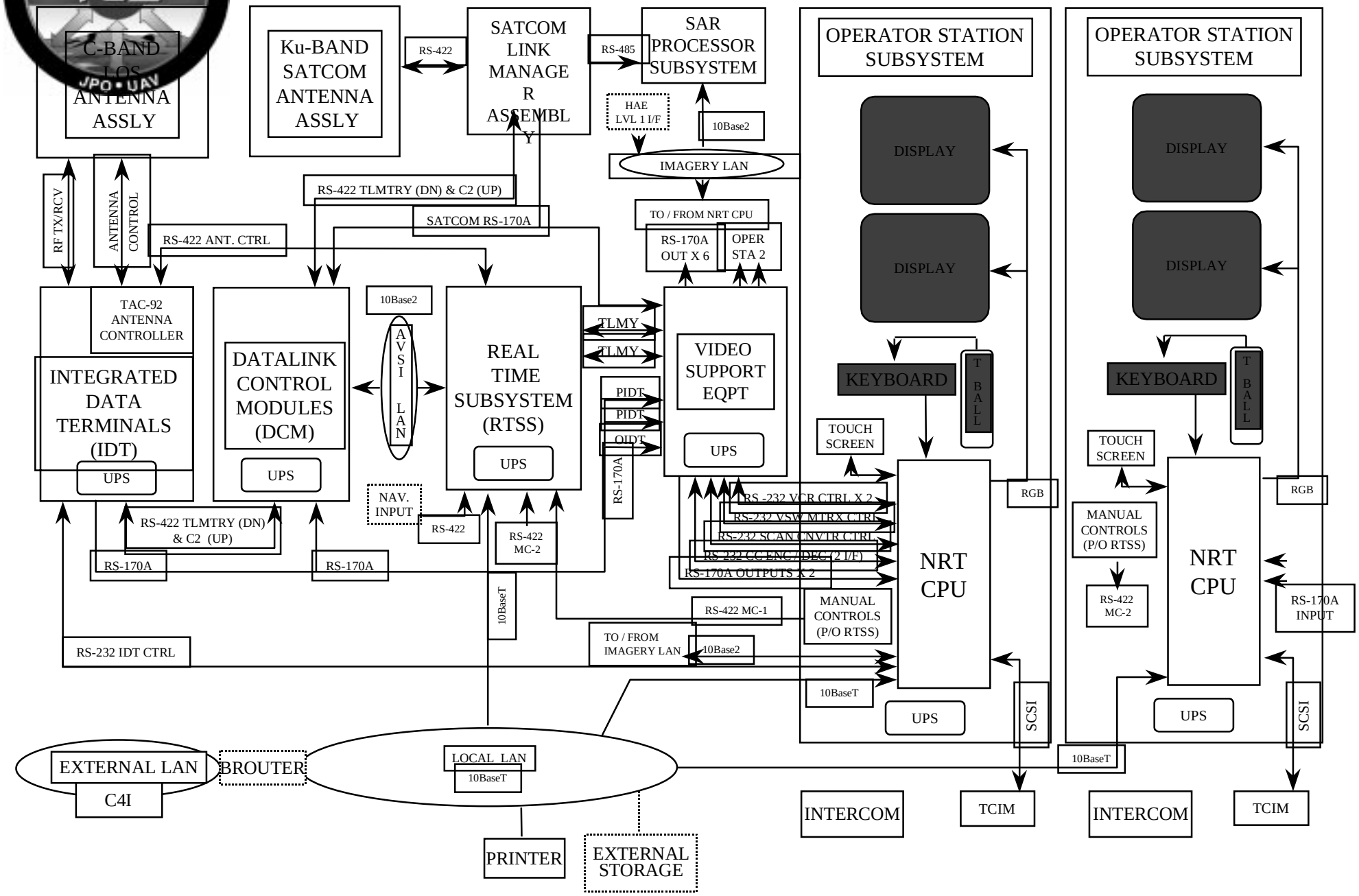

OPERATOR INPUT/OUTPUT HWCIs REQUIREMENT TO EB ALLOCATION

- REQUIREMENTS MATRIX SUMMARY
  - XX Total SSDD Requirements
  - Requirements Met With Following Builds
    - X With EB1
    - X With EB2
    - X With EB3
    - X With EB4
    - X With EB5

OPERATOR INPUT/OUTPUTOPERATIONAL ENVIRONMENTAL CONSIDERATIONS

Operating Temperature	0 F to +120 F
Storage Temperature	-25 F to 150 F
Temperature Shock	0 F to 70 F & 120 F to 70 F in 10 min
Temperature Turn On	In 10 min from 0 to 40 F Instantaneous above 40 F
Humidity	10 to 95%(non-condensing)
Altitude	15,000 ft (operating) 40,000 ft (non-operating)
Vibration	Operation and transport in Wheeled and Tracked vehicles
Shock/Drop	3 drops from 3 ft in transit case
Rain	Operates in conditions of blown percipitation and spillages
Sand & Dust	3.5 mph, 20 minutes
Inclination	Operates stationary, 30 degree Incline on any axis
Fungus	No nutrients/contaminants

OPERATOR INPUT/OUTPUT ELECTROMAGNETIC COMPATIBILITY CONSIDERATIONS

- Electromagnetic Interference (EMI), Emissions
  - Meet MIL-STD-461C, Notice 2, Part 4
    - Requirements CE03, CS02, CS06, RE02 and RS03

OPERATOR INPUT/OUTPUT HWCI PRELIMINARY DESIGN DESCRIPTION

- The Operator Output HWCI provides the necessary hardware to allow TCS operators to receive information from the NRT computer HWCI
- The Operator Input HWCI provides the necessary hardware to allow TCS operators to input information to the NRT computer HWCI

OPERATOR INPUT/OUTPUT HWCI OVERVIEW/DESCRIPTION OF OPERATION

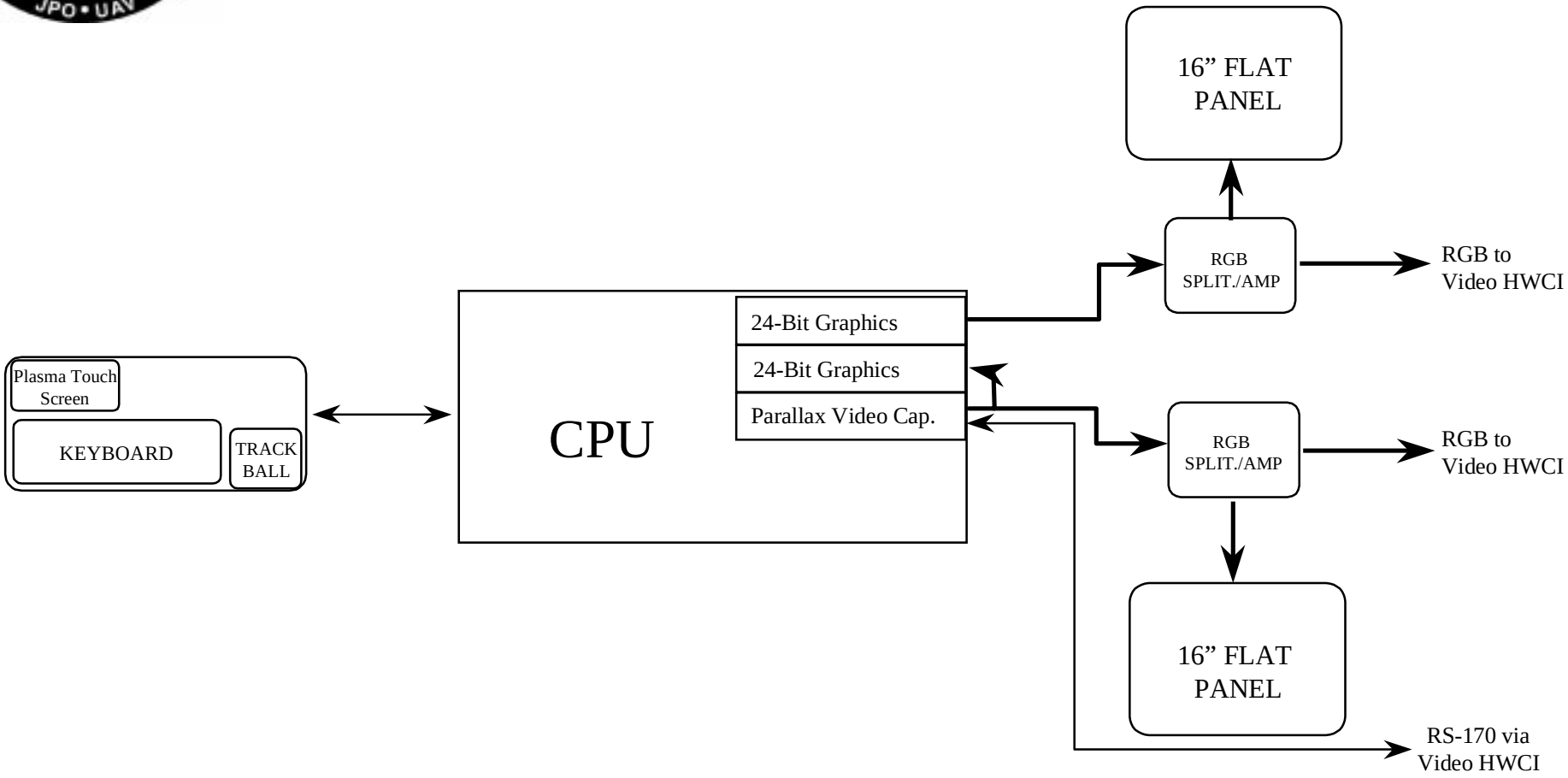

OPERATOR INPUT/OUTPUT HWCI OVERVIEW/DESCRIPTION

HWCIs:

- **16” High Resolution Flat Panel Displays**
- **Trackball**
- **Keyboard**
- **Plasma Touch Screen**
- **Parallax Video Interface**
- **RGB Splitter/Amps**

OPERATOR INPUT/OUTPUT HWCI INTERFACES

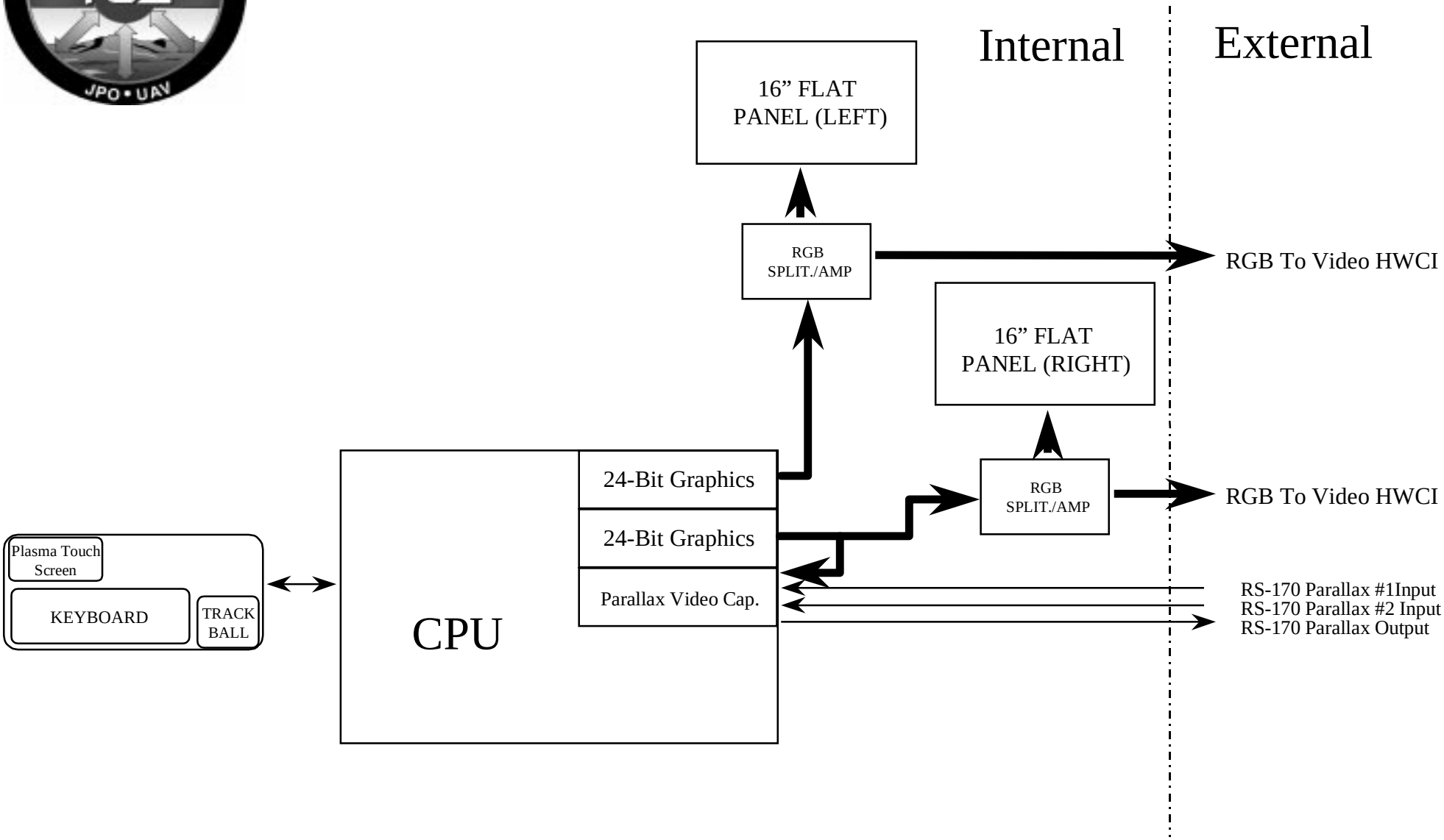

OPERATOR INPUT/OUTPUT PRELIMINARY DESIGN DRAWINGS

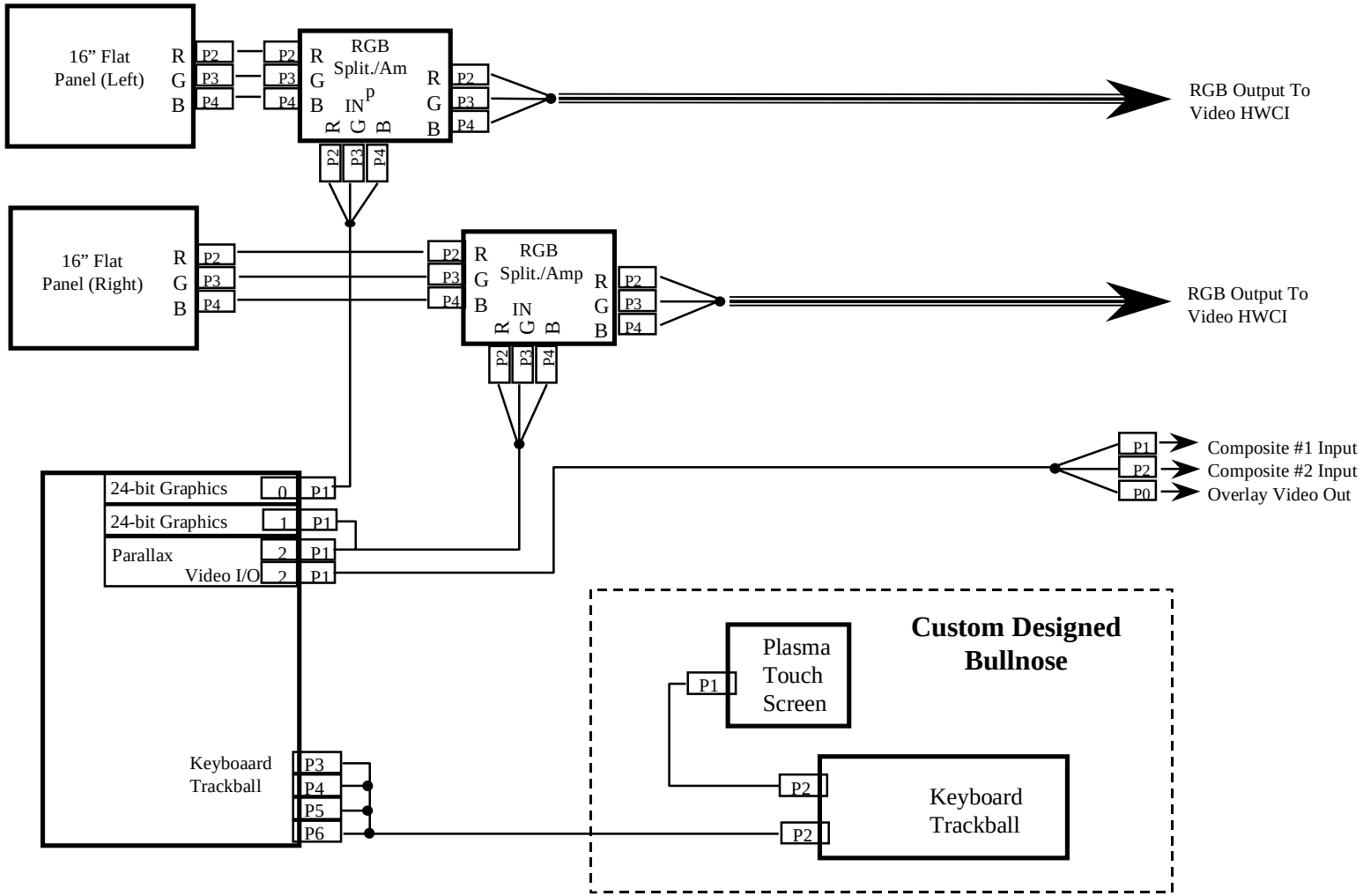

OPERATOR INPUT/OUTPUT IDENTIFICATION OF COTS/NDI ITEMS

- COTS Equipment
  - Extron ADA 300 RGB Splitter/Amp
- NDI Equipment
  - CHS-2 Contract Components
    - Flat Panel Displays
- Special Configuration Items
  - Custom Manufactured Bullnose

OPERATOR INPUT/OUTPUT PACKAGING IDENTIFICATION

- Utilized CHS-2 Contract Equipment
  - Version 2 Configuration
    - Equipment Constructed as Commercial Ruggedized

OPERATOR INPUT/OUTPUT PHYSICAL DATA

- **16” Rack Mounted Flat Panel Displays**
  - **Height = 17.75 inches**
  - **Width = 18.80 inches**
  - **Depth = 3.75 inches**
  - **Weight = 35.00 lbs Each**
- **Bullnose**
  - **Height = 5.50 inches**
  - **Width = 24.00 inches**
  - **Depth = 18.50 inches**
  - **Weight = 20.00 lbs Each**
- **RGB Splitter/Amplifier**
  - **Height = 1.75 inches**
  - **Width = 4.63 inches**
  - **Depth = 4.75 inches**
  - **Weight = 1.00 lbs Each**

OPERATOR INPUT/OUTPUT POWER REQUIREMENTS

- Power Supplied via UPS
  - 16” Flat Panel Displays
    - 115 VAC at 60 Hz
    - 1.0 a, 100 Watts
  - Bullnose
    - +5 and +12 Volts
    - 3.0 a
  - RGB Splitter/Amplifier
    - 115 VAC at 60Hz Converted to 9V
    - .50 a, 2 Watts

OPERATOR INPUT/OUTPUT
IDENTIFICATION OF SUPPORT EQUIPMENT

- NO SPECIALIZED MAINENANCE EQUIPMENT OR MATERIALS REQUIRED TO MAINTAIN EQUIPMENT