TCS DATA LATENCY

PREDATOR UPLINK LATENCIES

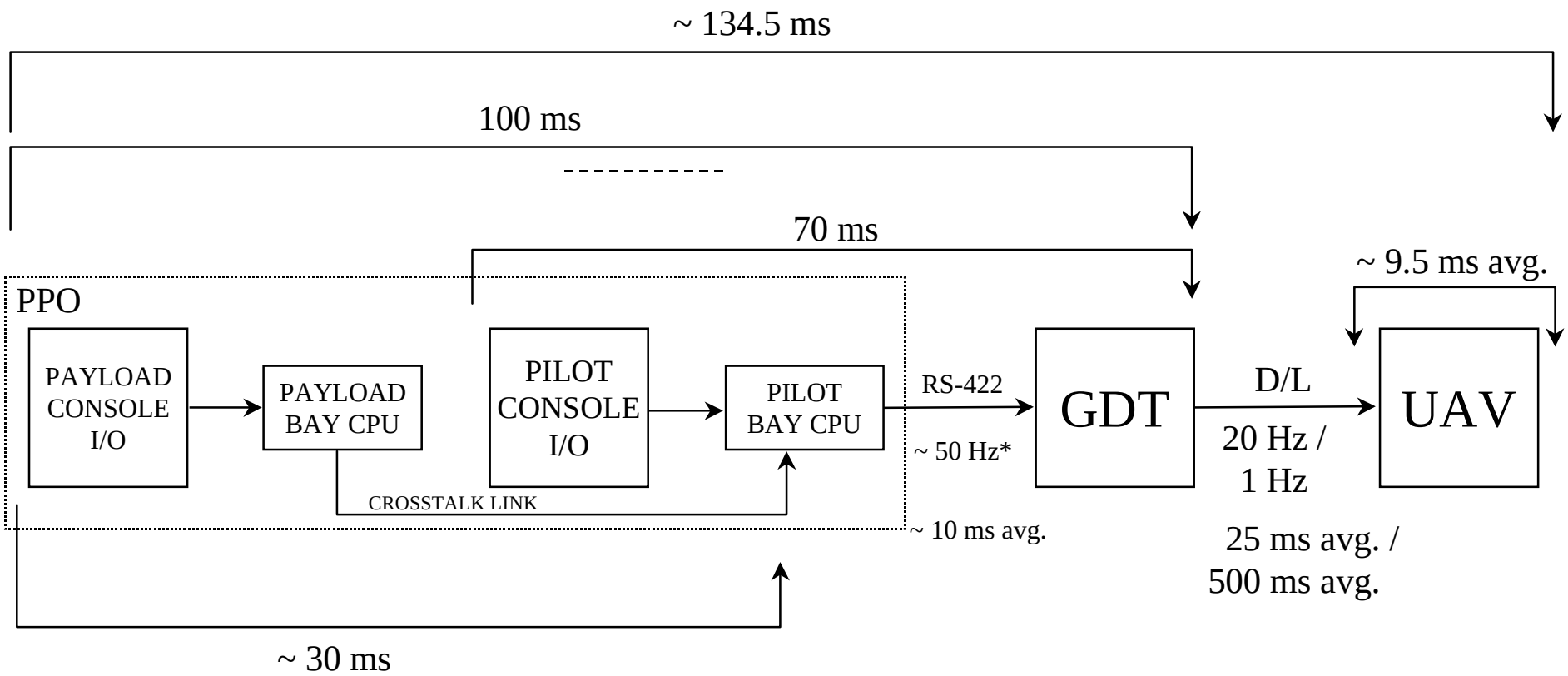

1 / 50 = .020 / 2 = 10 ms avg.

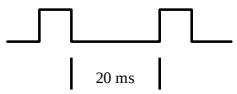

* Interface Rate Assumed

SPECIFIED BY GA FOR TCS:
70 ms Latency For Uplink Pilot Commands
100 ms Latency For Uplink Payload Commands

PREDATOR DOWNLINK LATENCIES

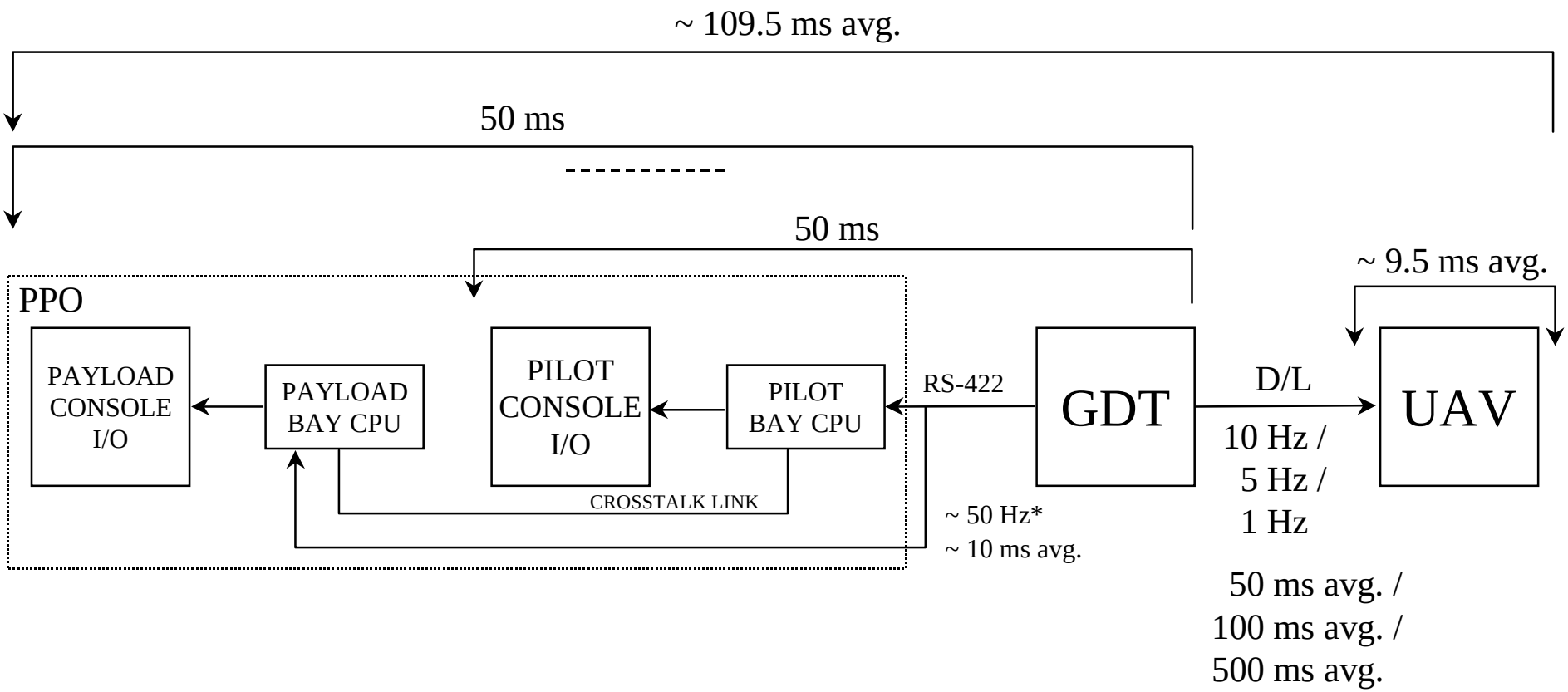

1 / 50 = .020 / 2 = 10 ms avg.

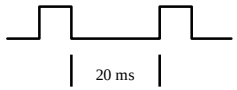

50 ms Latency For Downlink AV Information
50 ms Latency For Downlink Payload Information

* Interface Rate Assumed

PREDATOR UPLINK LATENCY

ALLOCATION ESTIMATES

PILOT CONSOLE I/F: 25ms
PILOT BAY CPU: 35ms
GDT BUS: 10ms
70ms

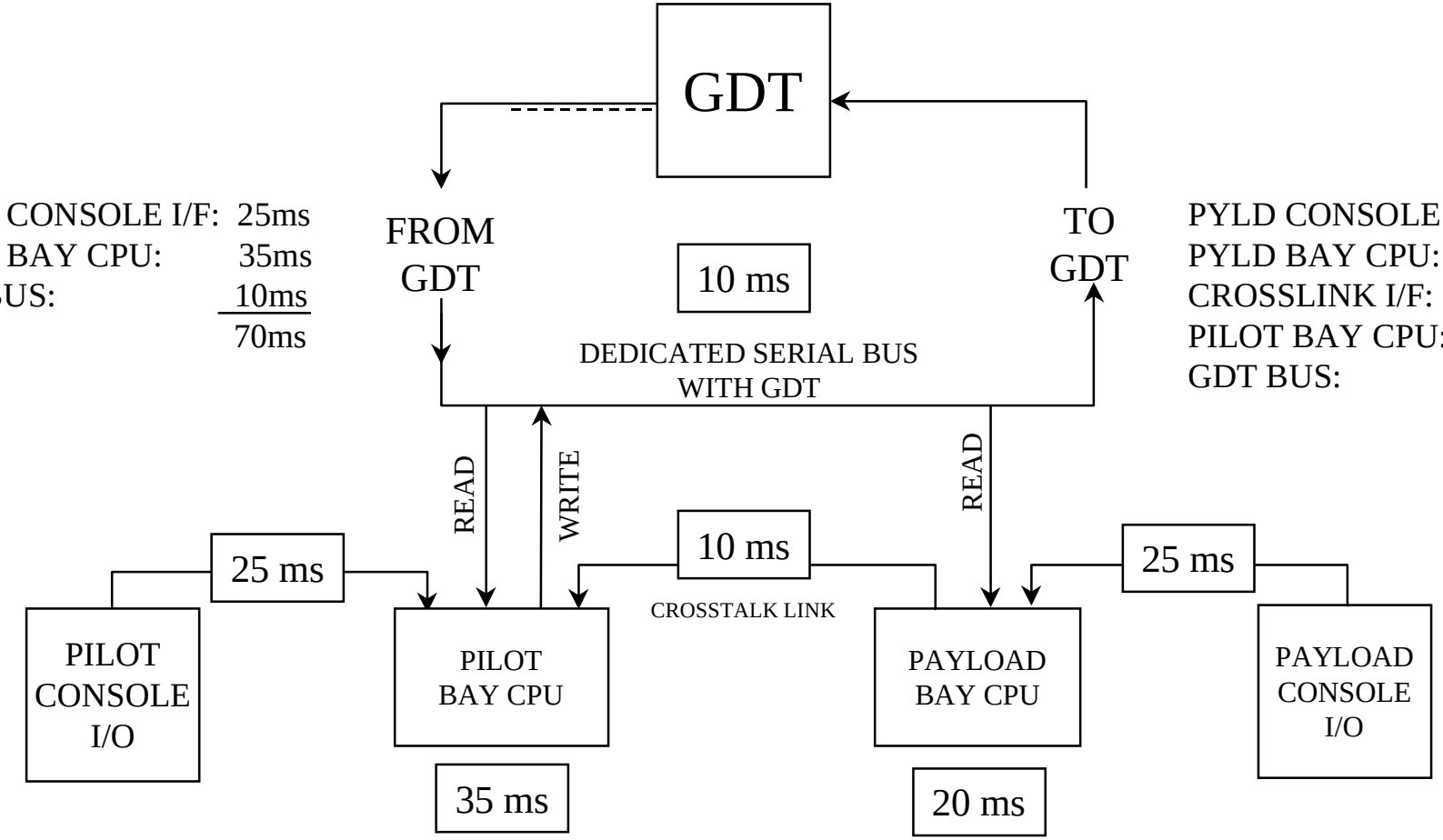

PYLD CONSOLE I/F: 25ms
PYLD BAY CPU: 20ms
CROSSLINK I/F: 10ms
PILOT BAY CPU: 35ms
GDT BUS: 10ms
100ms

PREDATOR DOWNLINK LATENCY

ALLOCATION ESTIMATES

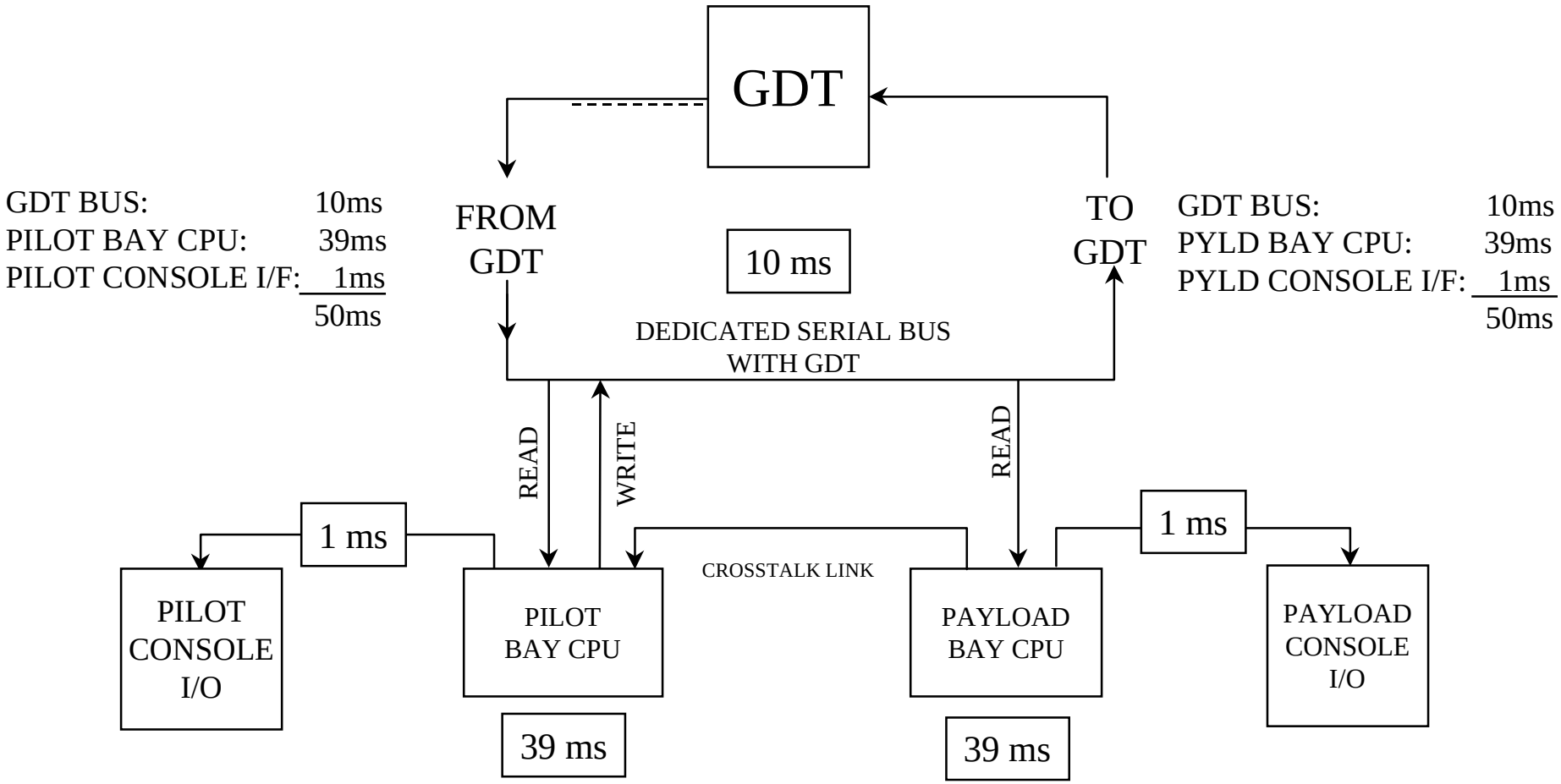

OUTRIDER UPLINK LATENCY

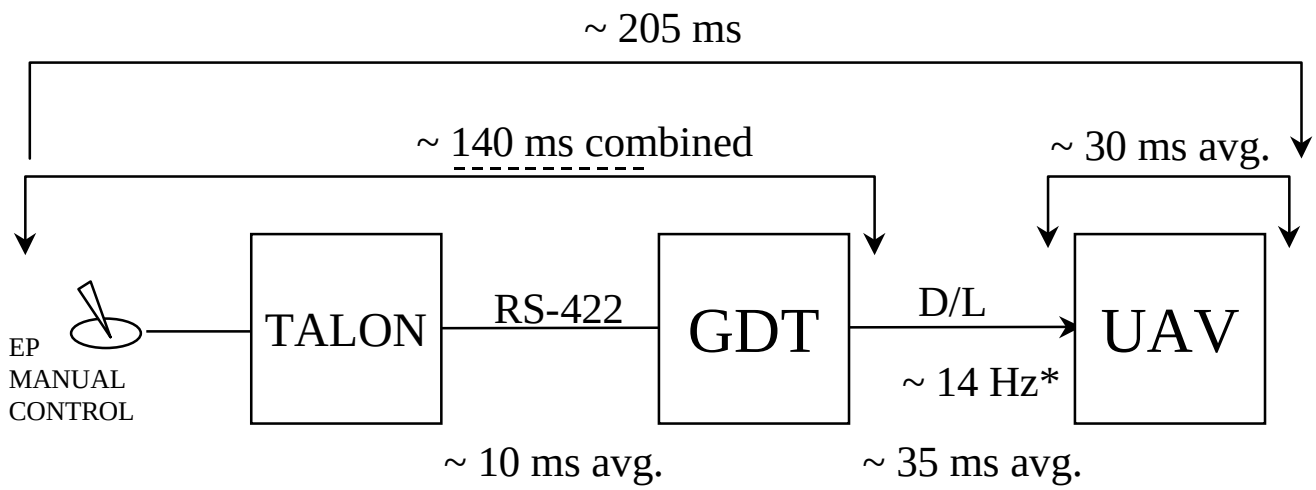

205 ms
- 30 ms UAV AP Delay
- 35 ms D/L Delay
140 ms latency

1 / 10 = .100 / 2 = 50 ms avg.

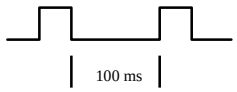

SPECIFIED BY ATK FOR TCS

* Interface Rate Assumed

OUTRIDER DOWNLINK LATENCY
(ASSUMED)

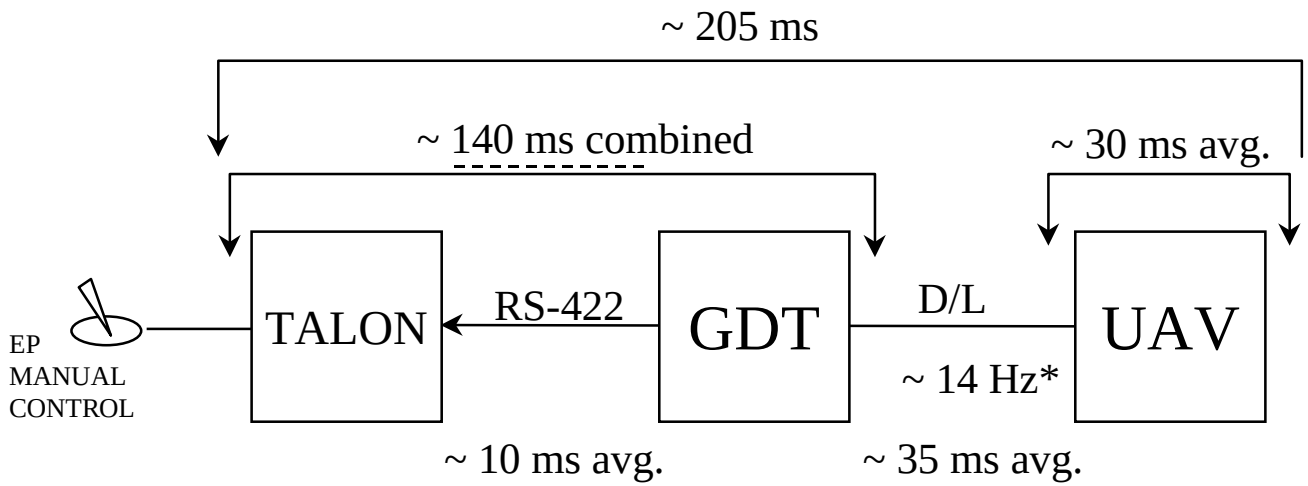

205 ms
- 30 ms UAV AP Delay
- 35 ms D/L Delay
140 ms latency

1 / 10 = .100 / 2 = 50 ms avg.

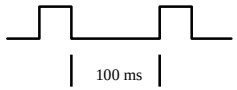

* Interface Rate Assumed

PIONEER UPLINK LATENCY

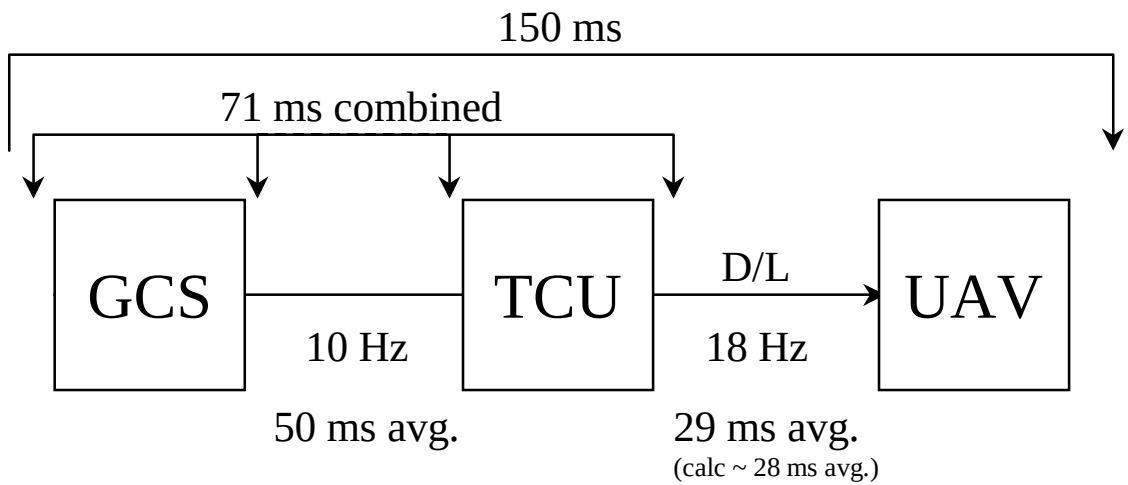

150 ms
- 29 ms D/L Delay
121 ms latency

1 / 10 = .100 / 2 = 50 ms avg.

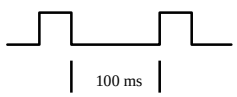

SPECIFIED BY AAI FOR TCS

PIONEER DOWNLINK LATENCY
(ASSUMED)

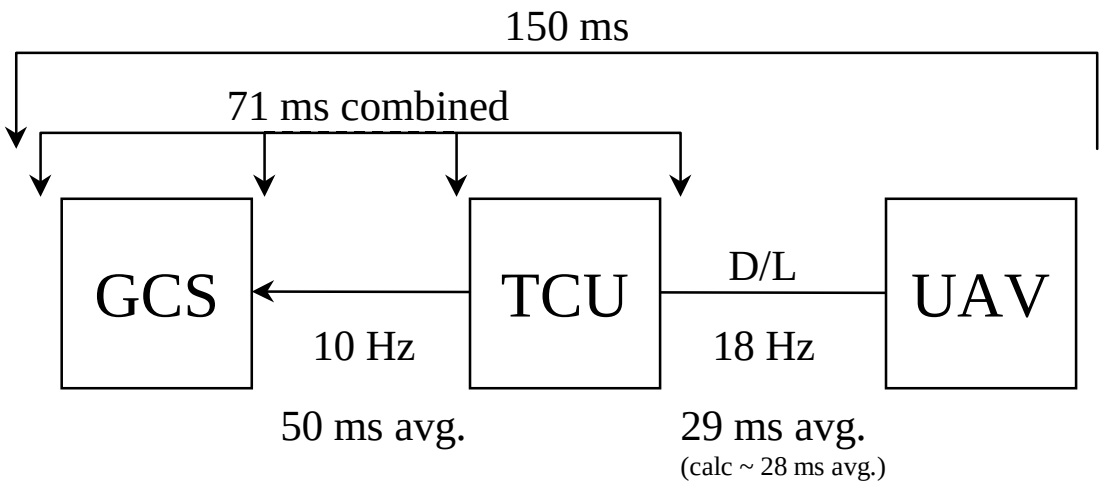

150 ms
- 29 ms D/L Delay
121 ms latency

1 / 10 = .100 / 2 = 50 ms avg.

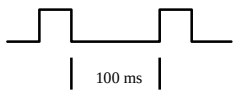

TCS SYSTEM HARDWARE DESIGN

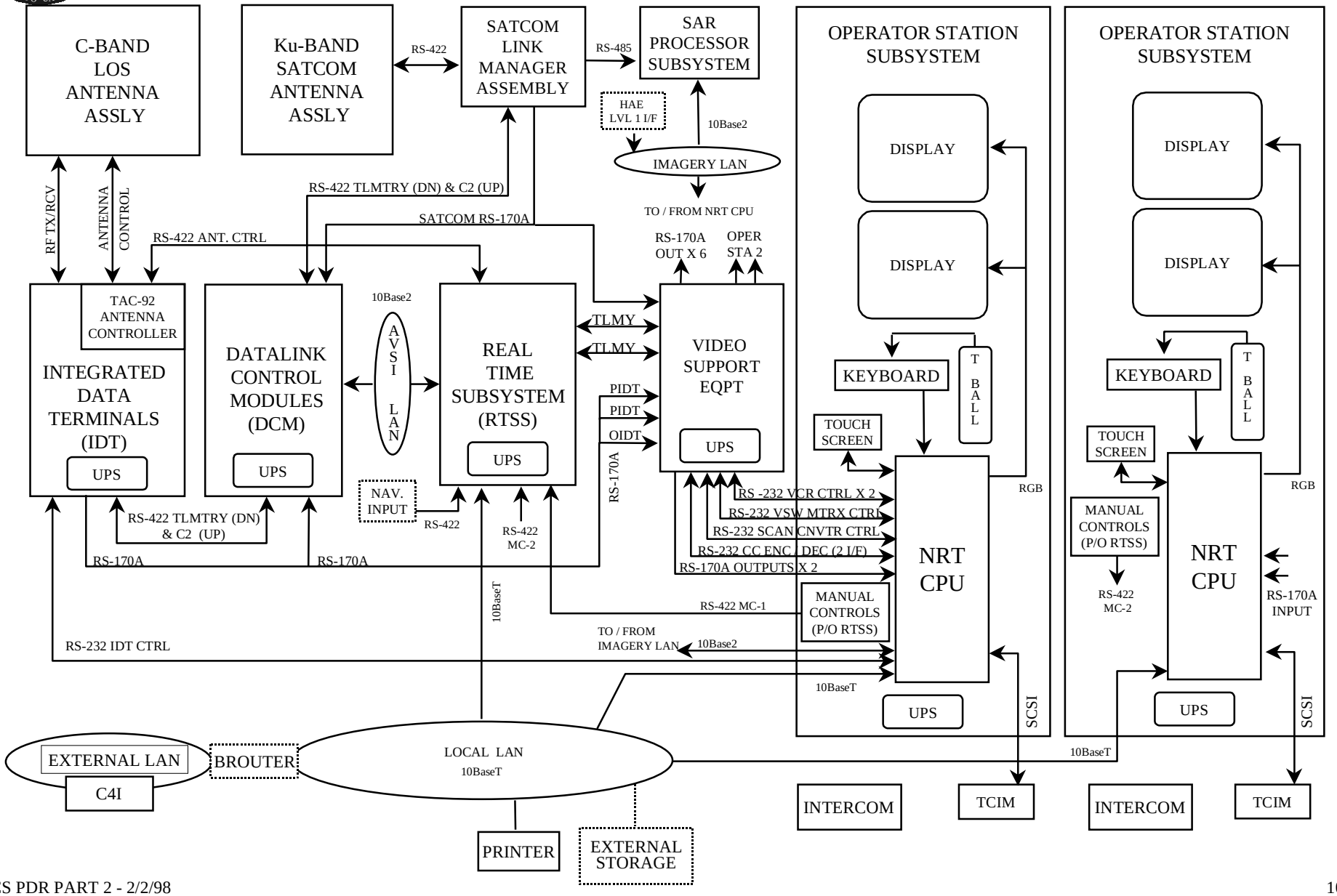

TCS UPLINK LATENCIES

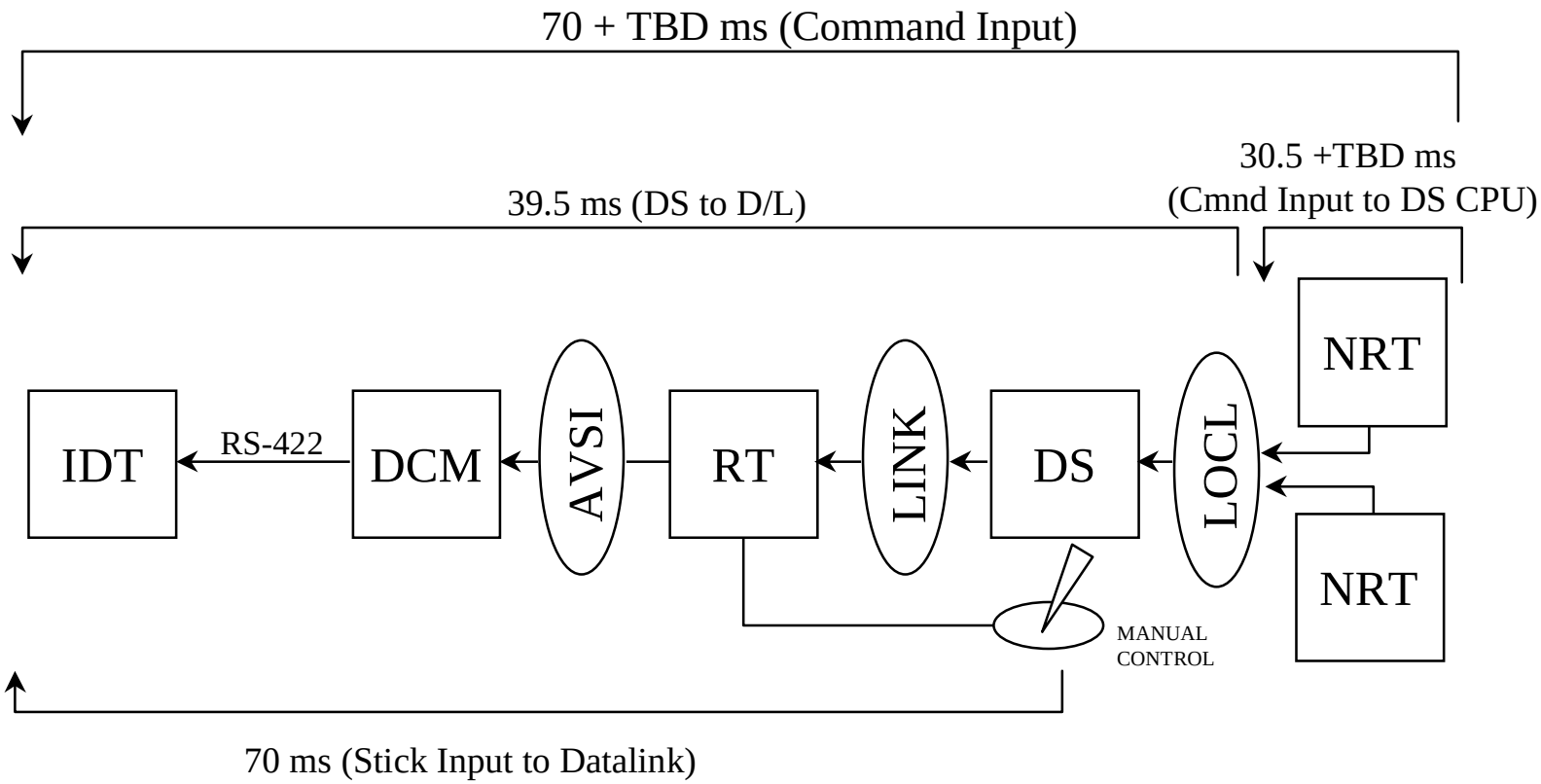

COMMAND INPUT UPLINK LATENCY ALLOCATIONS

COMMAND INPUT SENDER		RECEIVER	LATENCY ALLOCATION (msec) AVG.	
OPERATOR INPUT HWCI		NRT COMPUTER	0.5	
NRT COMPUTER		DII (X-WINDOW SERVER)	TBD	NOTE 1
DII(X-WINDOW SERVER)		UAV COMMON CONTROL S/W CSCI	TBD	NOTE 1
UAV COMMON CONTROL S/W CSCI		NRT COMPUTER	30	
NRT COMPUTER		DS COMPUTER (VIA LOCAL LAN (LOCL)	3.25	
DS COMPUTER		DS CSCI	0.25	
DS CSCI		DS COMPUTER	5	
DS COMPUTER		RTP COMPUTER (VIA LINK LAN)	0.25	
RTP COMPUTER		RTP CSCI	0.25	
RTP CSCI		RTP COMPUTER	5	
RTP COMPUTER		DCM COMPUTER (VIA AVSI LAN)	0.25	
DCM COMPUTER		DCM CSCI	0.25	
DCM CSCI		DCM COMPUTER	15	
DCM COMPUTER		IDT (VIA RS-422 I/F)	10	
		TOTAL	70	

Note 1: Data Latency through the DII/COE and other UNIX OS based software processes will be determined through analysis. CPU Loading and data propagation over a measured time period will be examined to determine average loading and latency given specific task execution. From this a distribution of expected latencies for a given loading/task execution will be derived.

MANUAL STICK INPUT UPLINK LATENCY ALLOCATIONS

MANUAL CONTROL INPUT SENDER		RECEIVER	LATENCY ALLOCATION (msec) AVG.
STICK		STK PROC	0.5
STK PROC		RTP COMPUTER	10
RTP COMPUTER		RTP CSCI	35
RTP CSCI		RTP COMPUTER	0.25
RTP COMPUTER		DCM COMPUTER (VIA AVSI LAN)	0.25
DCM COMPUTER		DCM CSCI	0.25
DCM CSCI		DCM COMPUTER	13.75
DCM COMPUTER		IDT (VIA RS-422 I/F)	10
		TOTAL	70

TCS DOWNLINK LATENCIES

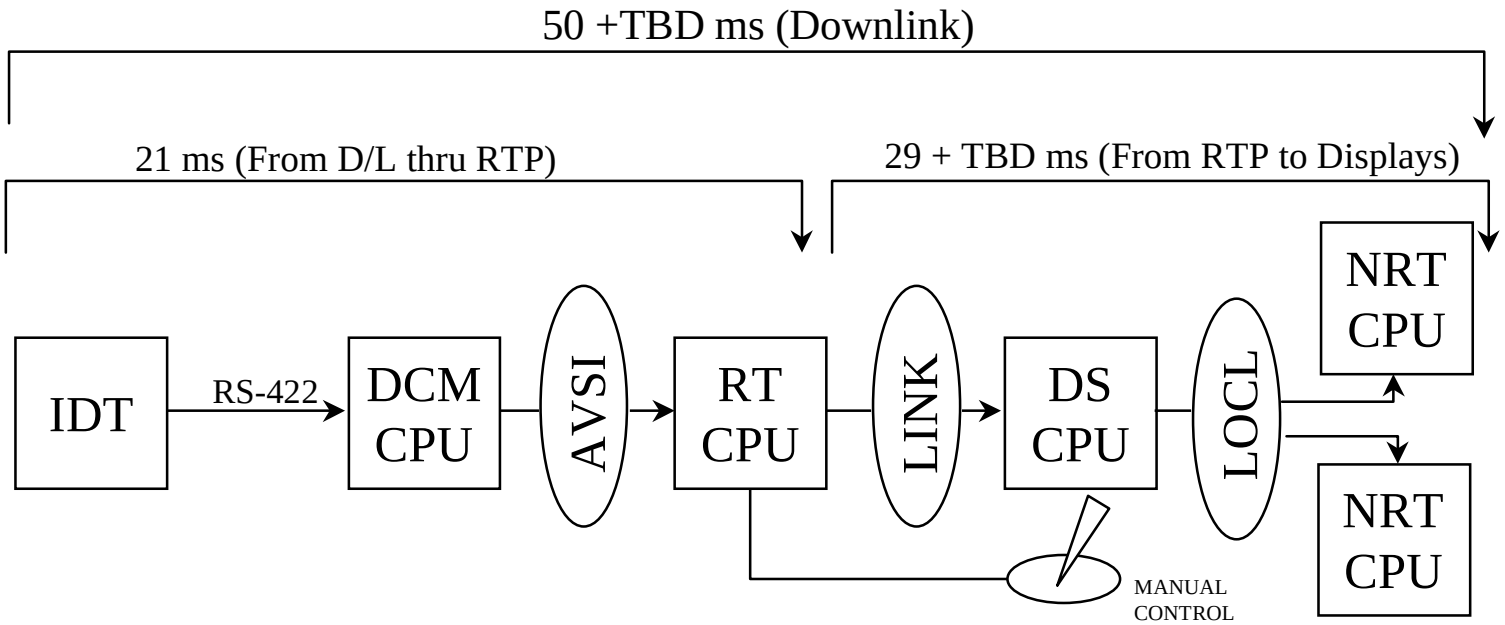

DOWNLINK LATENCY ALLOCATIONS

UAV AND PAYLOAD STATUS DOWNLINK			LATENCY	
SENDER		RECEIVER	ALLOCATION	
			(msec) AVG.	
IDT (VIA RS-422 I/F)		DCM COMPUTER	10	
DCM COMPUTER		DCM CSCI	0.5	
DCM CSCI		DCM COMPUTER	5	
DCM COMPUTER (VIA AVSI LAN)		RTP COMPUTER	0.25	
RTP COMPUTER		RTP MAIN	5	
RTP MAIN		RTP COMPUTER	0.25	
RTP COMPUTER		DS COMPUTER (VIA LINK LAN)	0.25	
DS COMPUTER		DS CSCI	5	
DS CSCI		DS COMPUTER	0.25	
DS COMPUTER		NRT COMPUTER (VIA LOCAL LAN [LOCL])	3.25	
NRT COMPUTER		UAV COMMON CONTROL S/W CSCI	TBD	NOTE 1
UAV COMMON CONTROL S/W CSCI		DII(X-WINDOW SERVER)	10.25	
DII (X-WINDOW SERVER)		NRT COMPUTER	TBD	NOTE 1
NRT COMPUTER		OPERATOR OUTPUT HWCI	10	
		TOTAL	50	

Note 1: Data Latency through the DII/COE and other UNIX OS based software processes will be determined through analysis. CPU Loading and data propagation over a measured time period will be examined to determine average loading and latency given specific task execution. From this a distribution of expected latencies for a given loading/task execution will be derived.

EMPIRICAL DATA
- TCS DATA SERVER -

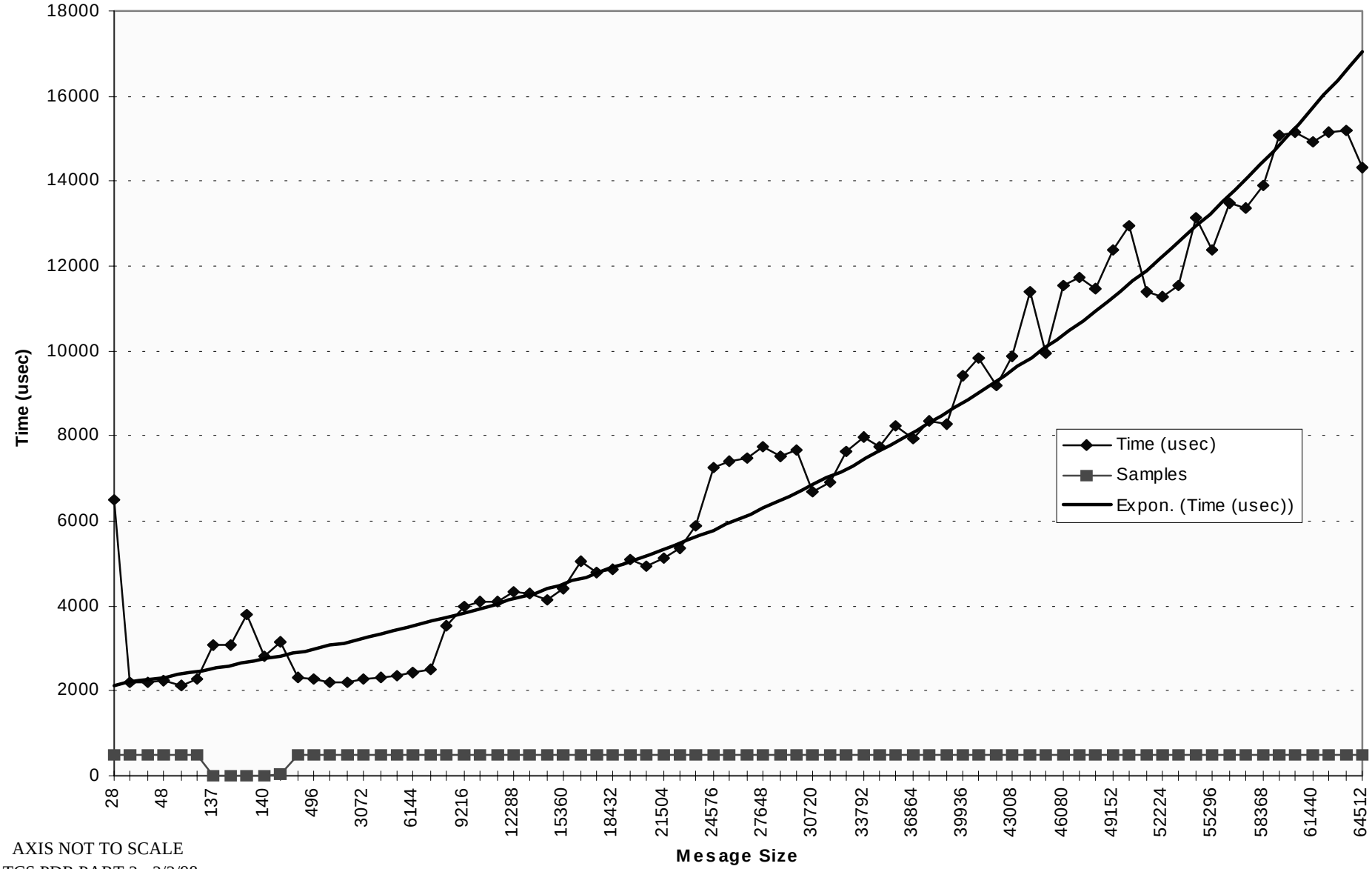

AXIS NOT TO SCALE

CALCULATED DATA EXAMPLE
- AVSI LAN -

AVSI: ETHERNET 10base2 Network

200 bytes/msg avg.
x 8 bits/byte
1600 bits/sec avg.

10 Mbits/ sec Ethernet
- 2 Mbits overhead
8 Mbits/sec

1600 bits/sec avg.
÷ 8 Mbits/sec avg.
.0002 sec avg.

Non-Real Time Latency Characterization Plan

- Use Software Test Tools developed for monitoring ATWCS NRT CPUs and examine Air Vehicle Operator NRT CPU Loading and Payload Operator NRT CPU Loading and process execution times during scripted operating scenarios, over defined periods of time
- Use Logic State Analyzer to examine data propagation through the system and determine when data is presented to the NRT CPU as the result of a downlink event, and when data is sent out from the NRT CPU for a given operator induced event
- Use Network Analyzer to examine network loading during scenario execution
- Use AV Simulation Executing on DCM, or System Interface Driver (SID) to provide response to operator input

- Operating Scenarios:
  - AV and Payload Monitoring
  - AV and Payload Monitoring + Image Capture, Message Prep & Transmit (IC/MP&Xmit)
  - AV Command Input Control + Payload Monitoring + IC/MP&Xmit
  - AV Command Input Control + Payload Command Input Control + IC/MP&Xmit
  - AV Command Input Control + Full Payload Control + IC/MP&Xmit
  - AV Full Control + Full Payload Control + IC/MP&Xmit
- Times: capture data every 10 msec, 50 msec, 100 msec, 500 msec, 1 sec, 10 sec, over a 15 minute period

EXAMINE THE RESULTS

- Determine minimum CPU loading during routine operations
  - Identify which processes are constant load and which are intermittent
  - Characterize process execution times for various events
  - Determine the distribution of CPU loading, and process execution times over the defined time periods
  - Characterize the data propagation delay (latency) as a result of CPU Loading and process execution times over the defined time periods
- Determine average CPU loading during routine operations
- Determine peak CPU loading during High-Pace operations