TCS Data Links

TCS Data Links

- Requirements
- LOS Antenna
- Integrated Data Terminal
- BLOS Antenna
  - Ship-based
  - Land-based
- Satellite Data Terminal

Block 0 System

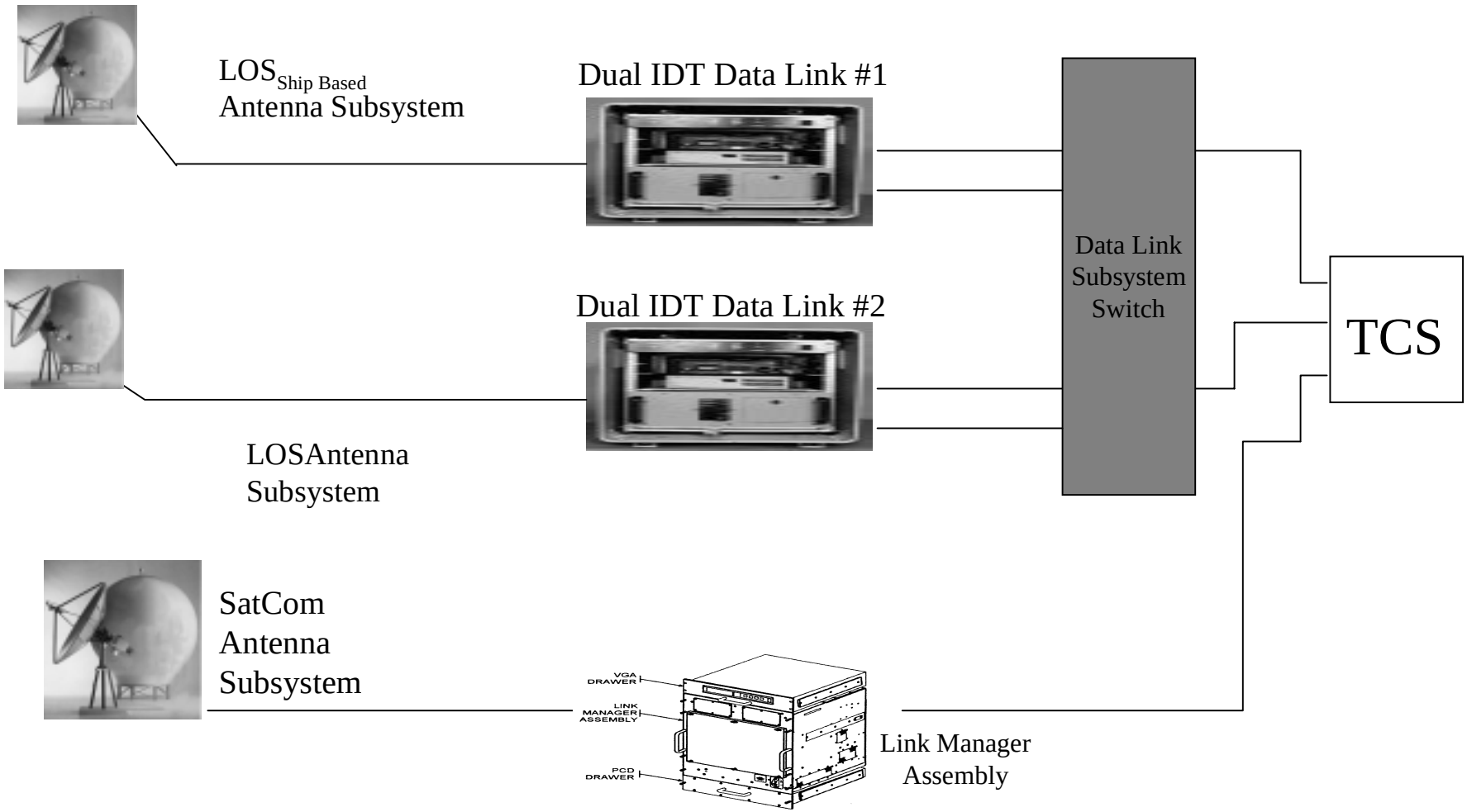

TCS Data Links Requirements

Threshold

- Simultaneous up/down link
- Simultaneous Line-of-Site (LOS) and Beyond-LOS (BLOS)
- Provide interface with respective UAV program-provided data links for command/control and UAV data
- Integral part of TUAV and MAE-UAV (Predator) ground control stations
- Simultaneous flight & payload control of at least 2 air vehicles (BLOS) using 1 TCS
- Interoperable with different types of UAVs and UAV payloads across 5 levels of UAV interaction

Objective

- LOS links will comply with CDL standards
- Multiple platforms/payloads simultaneously

Line-of-Site Antenna

Block 0 System

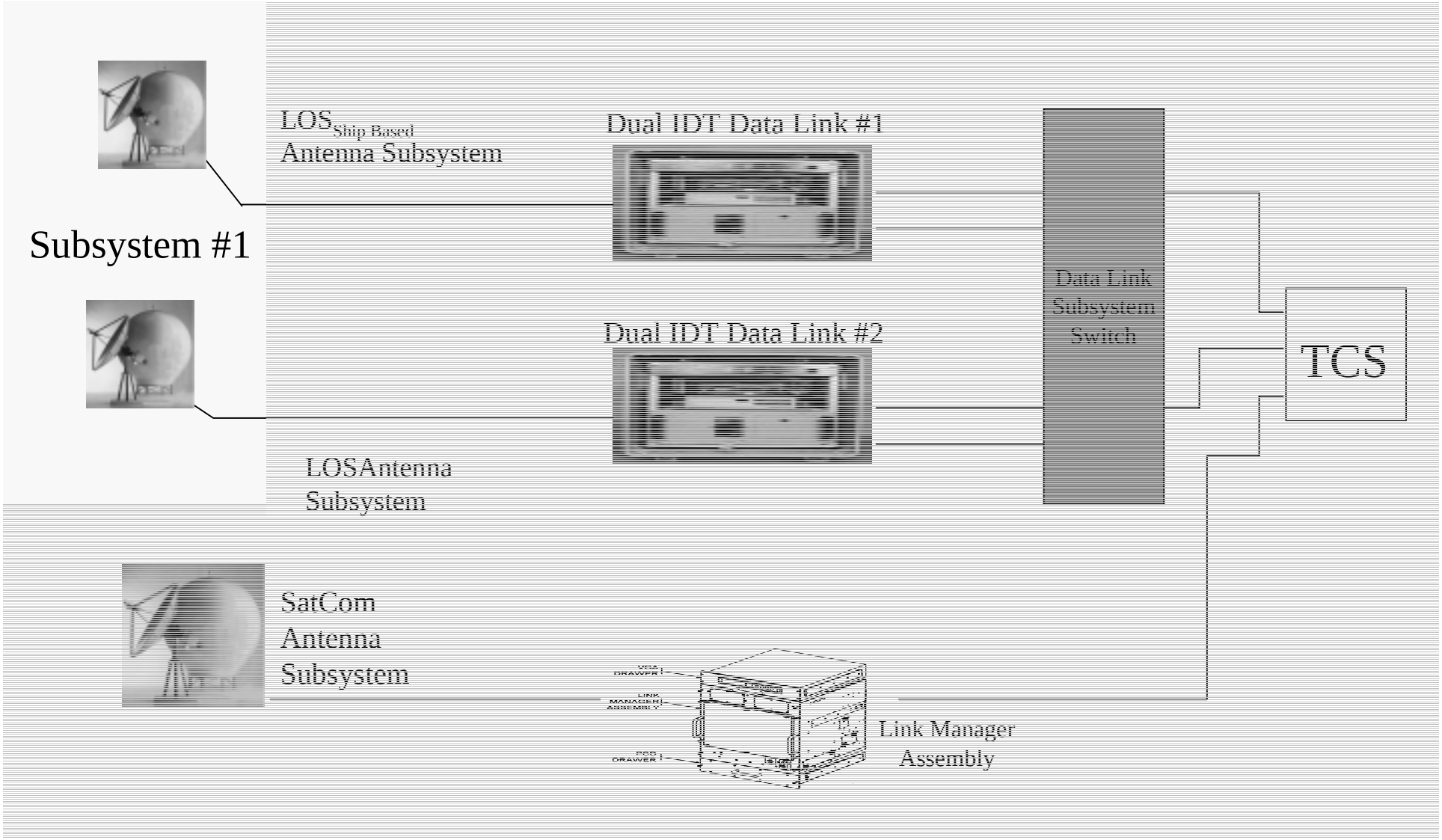

UAV Frequencies

	Frequencies used by UAVs			
	CONUS		OCONUS	
	command	video	command	video
Predator			5625-5850	5250-5475
Outrider	4400-4625	4775-5000		
Pioneer	4450-4570	4750-4950	5650-5850	5252-5450
HunterA	4415-4478	4755-4920	5255-5278	5555-5720
HunterB	4922-4985	4480-4645	5722-5785	5280-5445

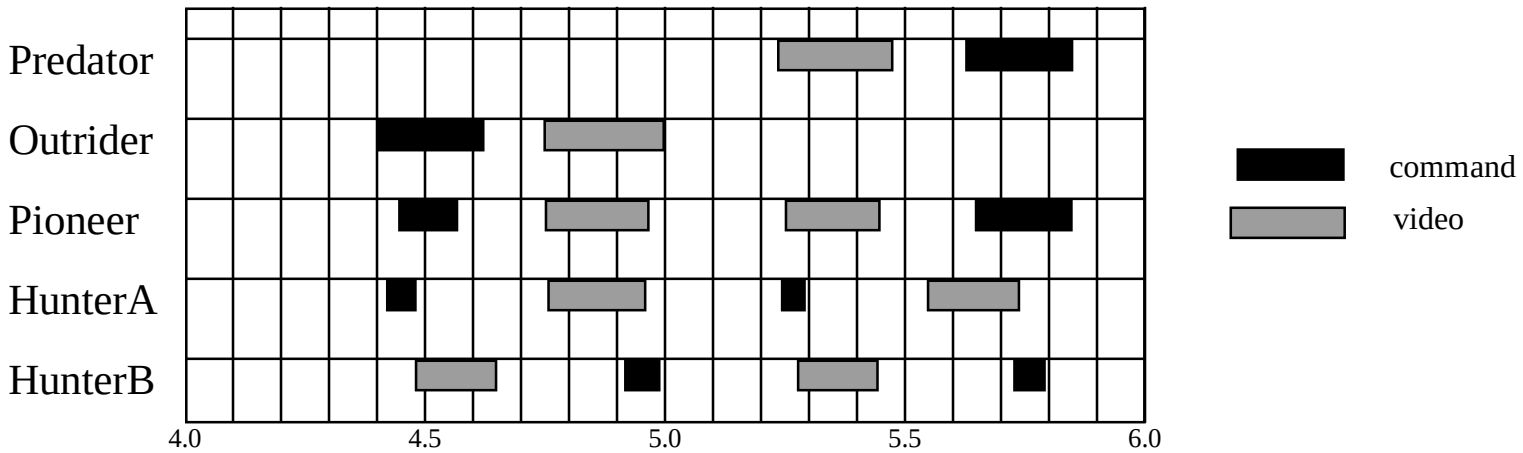

Antenna Stabilization

- Stabilization needed to compensate for ship roll/pitch/yaw effects
- Ship class and sea state - primary parameters that effect roll
- Max roll 20 degrees
- Max roll rate 9.8 degrees/sec
- Antenna must be self-stabilized
  - Commands for azimuth/elevation assume that antenna is level and oriented with respect to North.

Ship Roll Characteristics

		Wave Height		
		10.7 ft	16.4 ft	24.6 ft
DDG-51	Pitch °/s	1.89 / 7	3.09 / 7	4.58 / 7
	Roll °/s	15.3 / 13	20.09 / 13	*20.44 / 13
	Yaw °/s	2.60 / 99	3.76 / 99	3.78 / 99
LHA-1	Pitch °/s	0.91 / 8	1.63 / 10	2.64 / 10
	Roll °/s	9.02 / 15	13.79 / 15	16.59 / 15
	Yaw °/s	1.14 / 24	2.03 / 24	2.80 / 24
	Sea State	5	6	6
	Wind Speed (knot)	~25	~35	~44

Max pitch/roll/yaw in degrees (°)
Period of event in seconds (s)
* Max roll rate is 9.88 °/s

Polarization Mismatch

- Signal reduced due to polarization mismatch of UAV and receiving antenna
- Mismatch can be caused by ship roll or UAV banking
- Loss ~ $\cos^2(\theta_1 - \theta_2)$

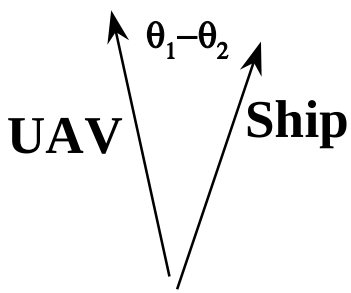

$(\theta_1 - \theta_2)$	Loss (dB)
10	0.13
20	0.54
30	1.25
40	2.31
50	3.84
60	6.02
70	9.32
80	15.21

Antenna Polarization

- TCS antenna must match or attempt to match the polarization of the UAVs
  - Predator Vertical
  - Pioneer Vertical
  - Hunter Vertical
  - Outrider RH Circular
- TCS uses Vertical Polarization on High and Low gain antennas
- Polarization mismatch (lack of tracking) is an issue.

Link Budget

Scenario	Nominal	More TX Power	Shorter Distance	Clear Sky	Less S/N
UAV Power (W)	10	20	10	10	10
Distance (nmi)	107.92	107.92	50	107.92	107.92
(km)	200.00	200.00	92.66	200.00	200.00
TCS Antenna Temp (K)	290	290	290	150	290
Required S/N (dB)	12	12	12	12	6
Margin (dB)	10.0	13.0	16.7	11.0	16.0

Link Budget Details

UAV transmit		Carrier Power		Noise	
HPA (10w)		40.00 dBm	Ant Temp	290 deg K	(cloudy, worst case)
horn antenna		15.00 dB	LNA NF	0.7 dB	
misc losses		-3.00 dB	LNA temp	50.72	
			LNA gain	38.00 dB	
Total source level		52.00 dBm	Ant-LNA loss	2.80 dB	
freq in MHZ	5300		receiver NF	3 dB	
distance (Nmi)	107.9	199946.93 (meters)			
path loss		-152.95 dB			
rcv antenna gain		25.00 dB	Total Temp ref		
plumbing loss (relay and hardline)		-1.60 dB	to LNA input	340.77 deg K	
diplexer loss		-1.20 dB			
		----------	Boltzman's K	-198.6 dBm/K-Hz	
input to LNA		-78.75 dBm	Bandwidth	18 MHz	
LNA gain		38.00 dB			
output of LNA		-40.75 dBm(≤ 9 dBm!!)			

S/N ratio at LNA input		22.0			
Required S/N		12.0			
Margin		10.0			

TCS Antenna Assembly

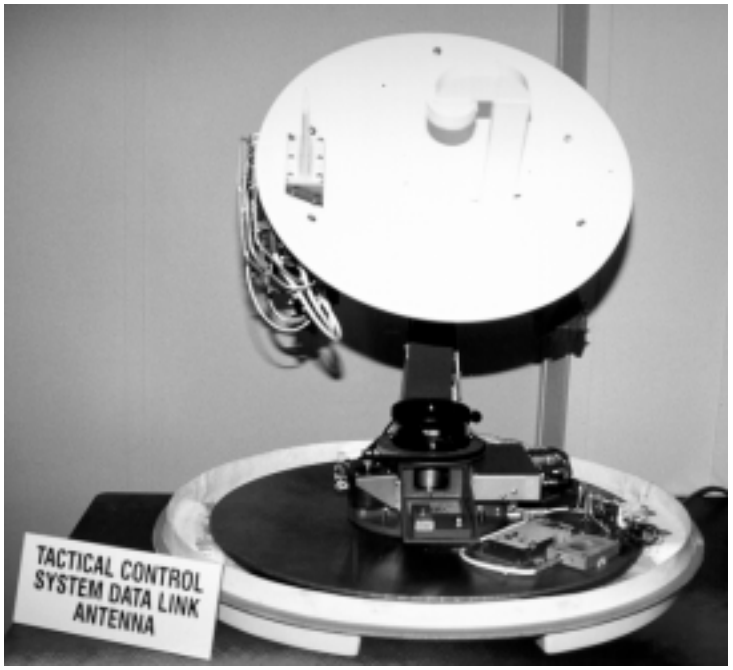

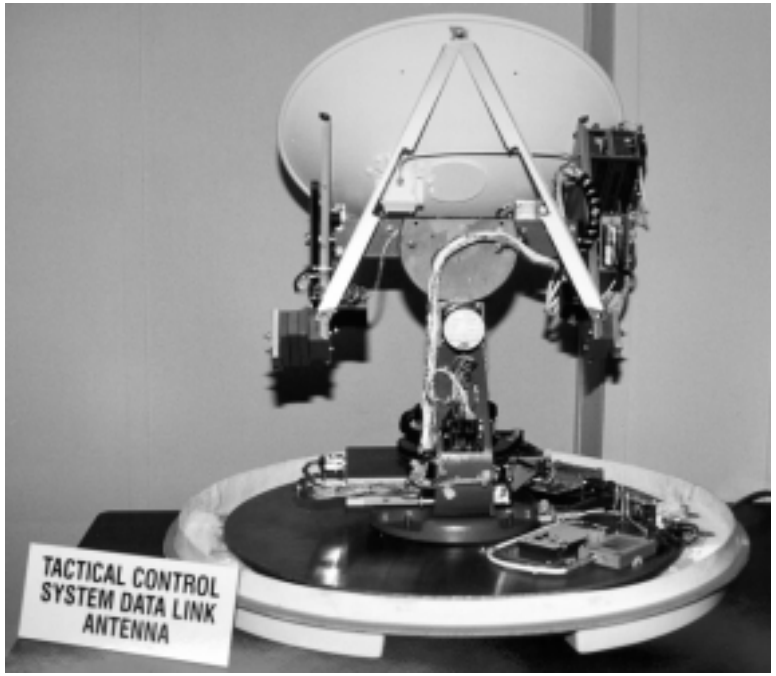

TCS Omni-directional Disc-cone Antenna

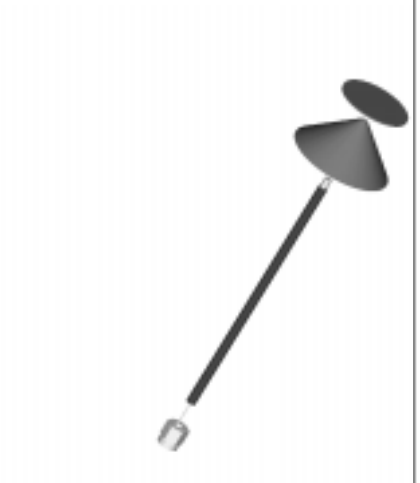

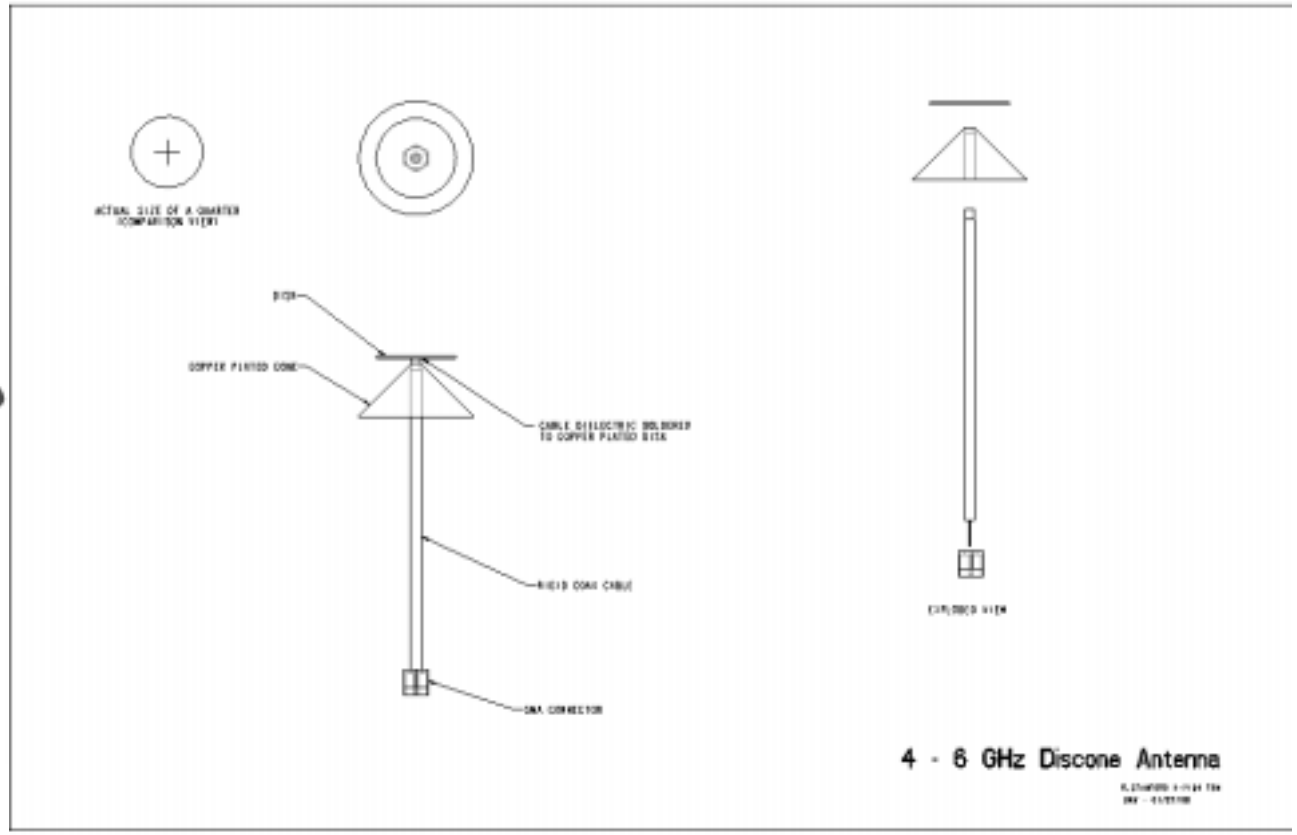

X.X +-0.1
X.XX +-0.01
X.XXX +-0.001
ANG. +-0.5

SCALE : 1/1 TYPE : ASSEM NAME : UAV SIZE : D

TCS Antenna Diagram

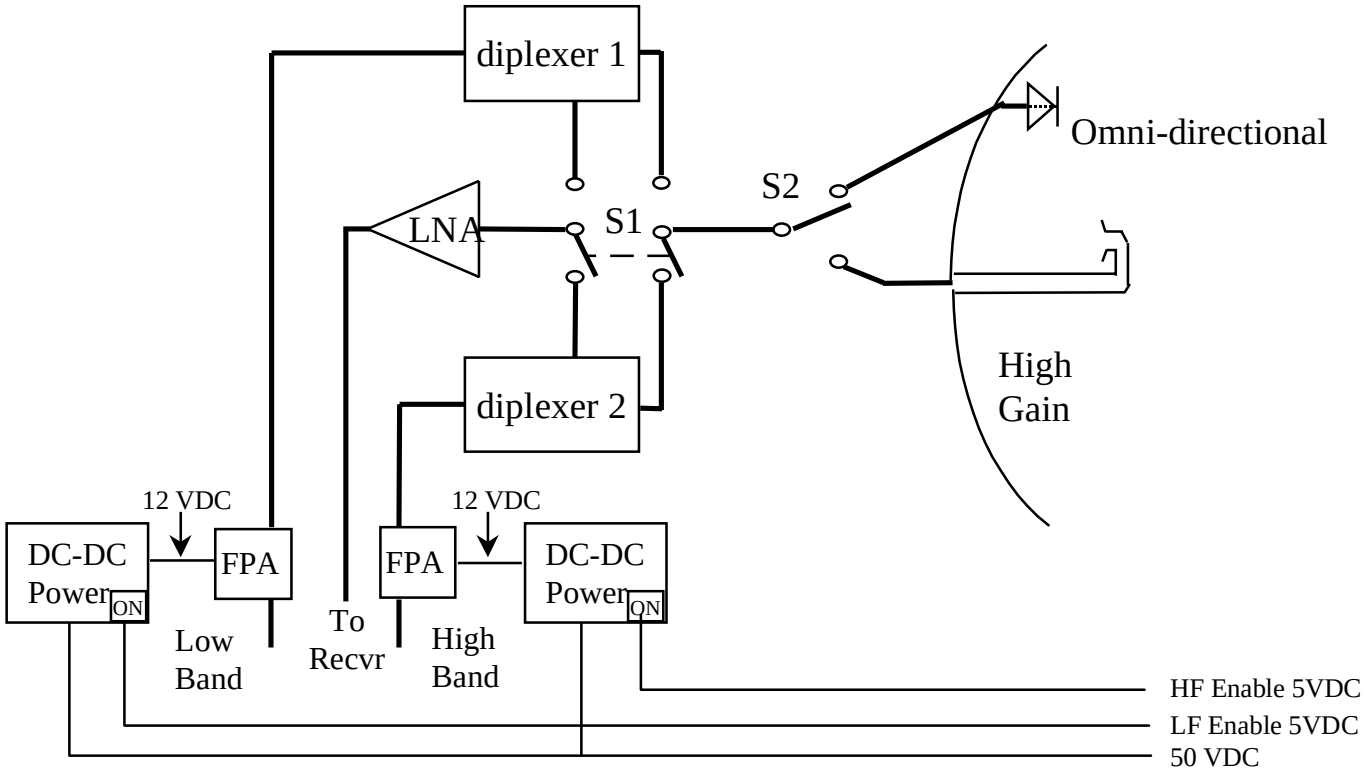

HWCI

Stabilized Pedestal *

DC-DC Power Supply (2) *

Final Power Amp (2) *

Diplexer (2) *

LNA *

RF Switch (3) *

High Gain Antenna *

Omni-directional Antenna

*COTS parts

Operational and Physical Parameters

Operational Parameters

	Bandwidths (GHz)
Antenna	4.4 - 5.9
Final Power Amp	4.4 - 4.65
	5.625 - 5.85
Low Noise Amp	4.75 - 5.45
Relay	3 - 8
Diplexer (high)	Tx 5.625 - 5.85
	Rx 5.25 - 5.475
Diplexer (low)	Tx 4.4 - 4.65
	Rx 4.75 - 5.0

Physical Parameters

Size: Fits 30” diameter, 36” high radome

Weight: <100 pounds

Power: 28V @ 2 Amps, 50V at 2.5 Amps

Electromagnetic Compatibility Considerations

- SPS-10 C-band search radar 5450-5825 MHz, 500kW, .25/1.3 μsec, 625-650 prf
- SPS-67 C-band search radar
- SPS-6 L-band search radar 1250-1350 MHz, 500kW, 4/1 μsec, 625-650 prf
- SPS-40 UHF 2D radar 400-450MHz
- SPS-64 navigation radar, 9345-9405/3025-3075 MHz, 20/50 kW X-band, 60kW S-band
- Additional Joint Spectrum Center Data

TCS Frequencies

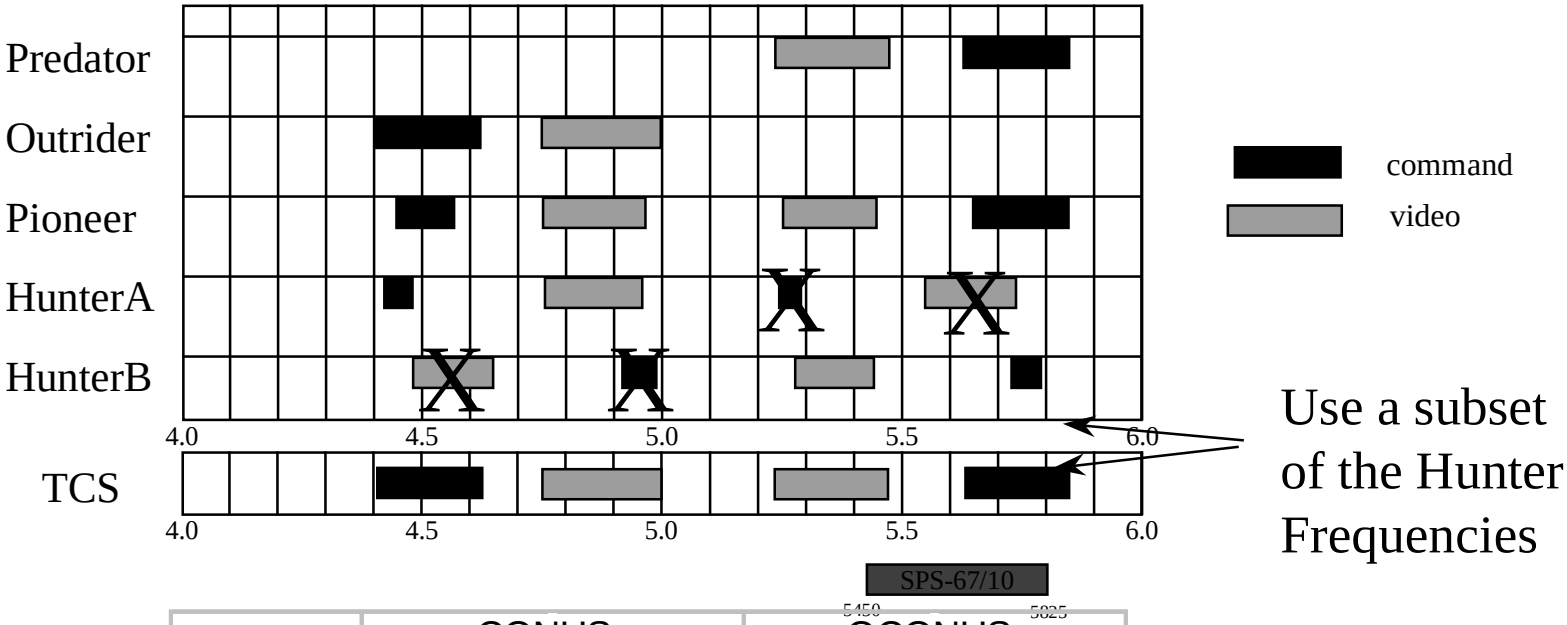

Use a subset of the Hunter Frequencies

	CONUS		OCONUS	
	command	video	command	video
TCS	4400-4625	4750-5000	5625-5850	5250-5475

TBR due to EMI

Interfaces

- **RF Heliax Cable Wave Guides**
  - 3 for connection to IDT - Tx(high) Tx(low) and RCV
  - Power level out of the Intermediate Power Amplifier must be attenuated for correct input to Final Power Amplifier
- **Control Interface**
  - Pointing commands to pedestal control unit (RS-422)
  - Power for Pedestal Control Unit, stepping motors, Low Noise Amplifier (28V@2A)
  - Power for Final Power Amplifier (50V @ 2.5A)
- **GPS data/Nav interface**
  - 1 update per second is more than sufficient to compensate for changes in ship location and roll/pitch/yaw.
  - ***Software Interface Issue***

Documentation

- Electrical Test Report, Radiation Pattern Measurements, 20 “ Diameter Prime Focus UAV Antenna, Model No. AS20-44/S, Part No. 9731-800, Seavey Engineering Associates, Inc.
- Antenna/Pedestal Assembly Specification, SSD/PL-97-0333, JHU/APL
- Operation and Maintenance Manual, SeaTel Stabilized Pedestal Assembly, Model 2094, SeaTel, Inc.
- Assembly Drawings for Electronics Mounting Plate, Radome Baseplate, and disc cone antenna in process

Integrated Data Terminal

Block 0 System

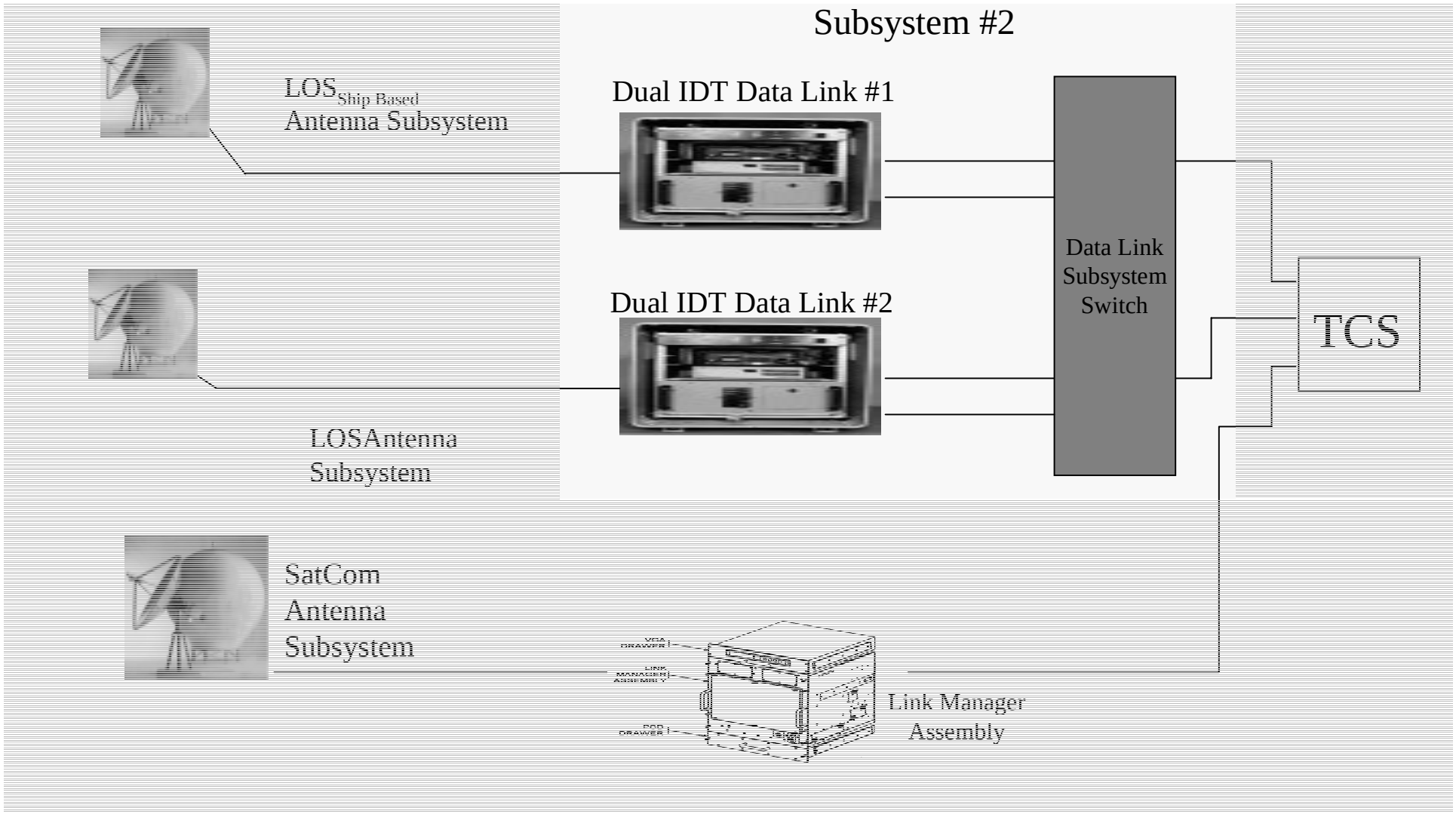

TCS AV Frequency Chart

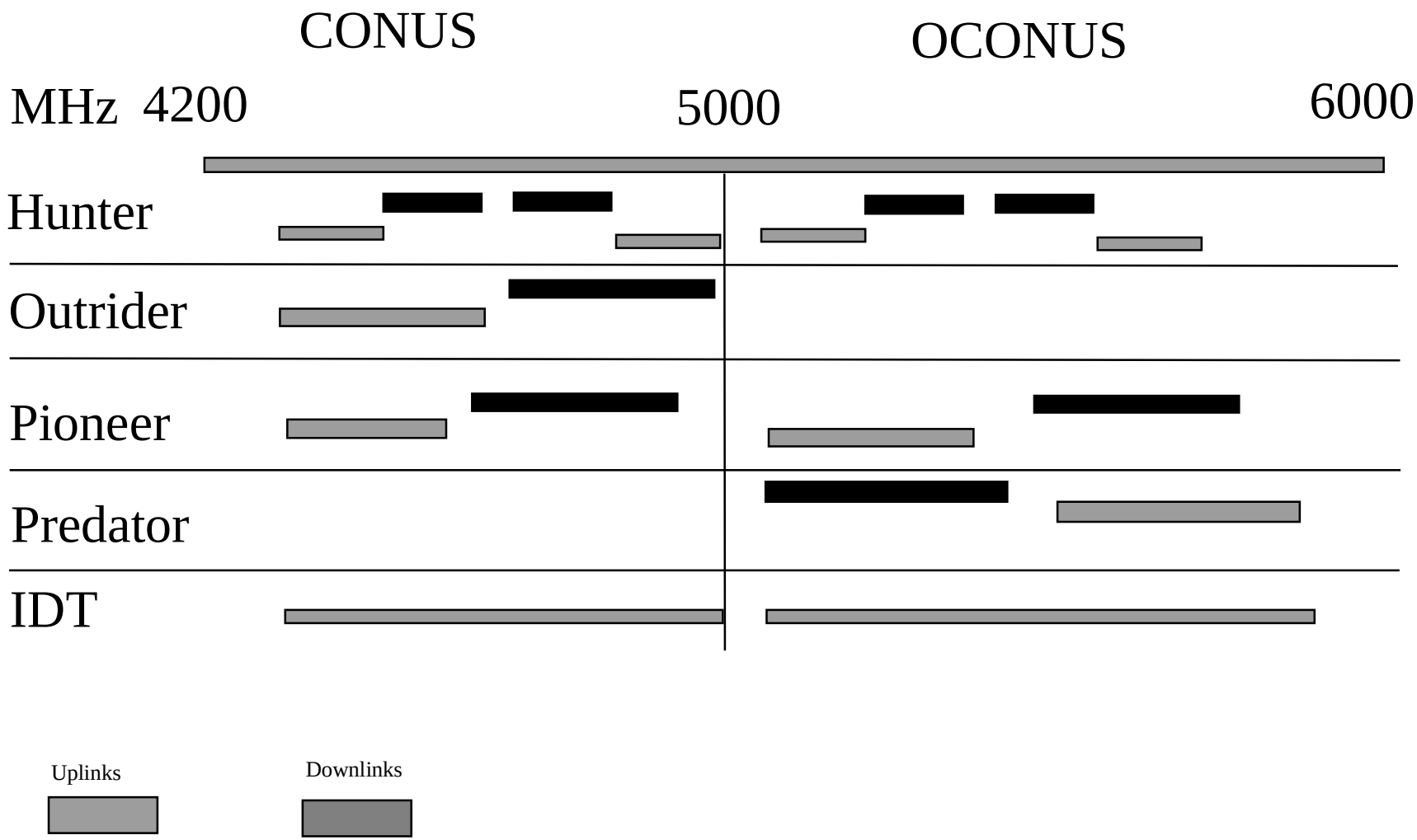

Tactical UAVs

UAV Name	*FunctionName*	*Uplink(MHz)*	*Modulation*	*Downlink(MHz)*	*Modulation*	*SubCarrier*
Hunter						
	LOS					
		4415-4478	FSK	4755-4920	NTSC/FSK	5.5 MHz
		4920-4985	FSK	4480-4645	NTSC/FSK	5.5 MHz
		5255-5278	FSK	5555-5720	NTSC/FSK	5.5 MHz
		5720-5785	FSK	5280-5445	NTSC/FSK	5.5 MHz
Outrider						
	LOS					
		4400-4625	FSK	4775-5000	NTSC/FSK	7.5 MHz
Pioneer						
	LOS					
		420-450	FSK	None	None	None
		4450-4570	BPSK	4750-4950	NTSC/FM	7.5 MHz
Predator						
	LOS					
		5625-5850	FSK	5250-5475	NTSC/FM	6.8 MHz
	SATCOM					
		11450-11950	OQPSK	14000-14500	OQPSK	None
		251.95-269.95	BPSK & OQPSK	292.95-310.95	BPSK & OQPSK	None

Data Link Switch

- Data Link Subsystem Switch switches individual antenna Command/Return link interface to individual DCM telemetry channel depending on ship's blockage
- Decision to switch between antennas dependant on ship blockage tables loaded in software
- Each ship will have its own unique blockage table

IDT Block Diagram

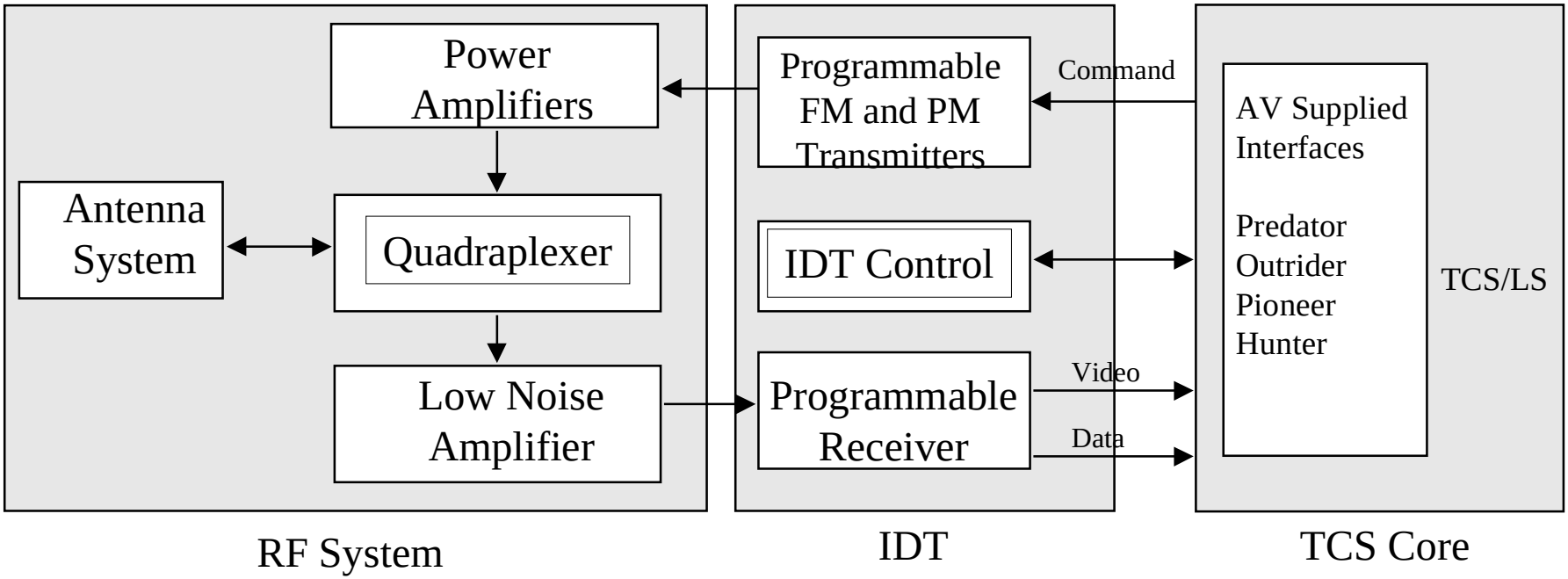

CAPABILITIES

- Analog FM system
- Programmable transmit and receive for CONUS and OCONUS bands
- Programmable subcarrier modulators
- Programmable subcarrier demodulators
- Selectable high gain directional or omni antenna
- All capabilities selectable via local keyboard or remote input
- Compact modular format for efficient reconfiguration
- Powered by 120 Vac 60 Hz

IDT Unit Configuration
Receiver/Transmitter Unit

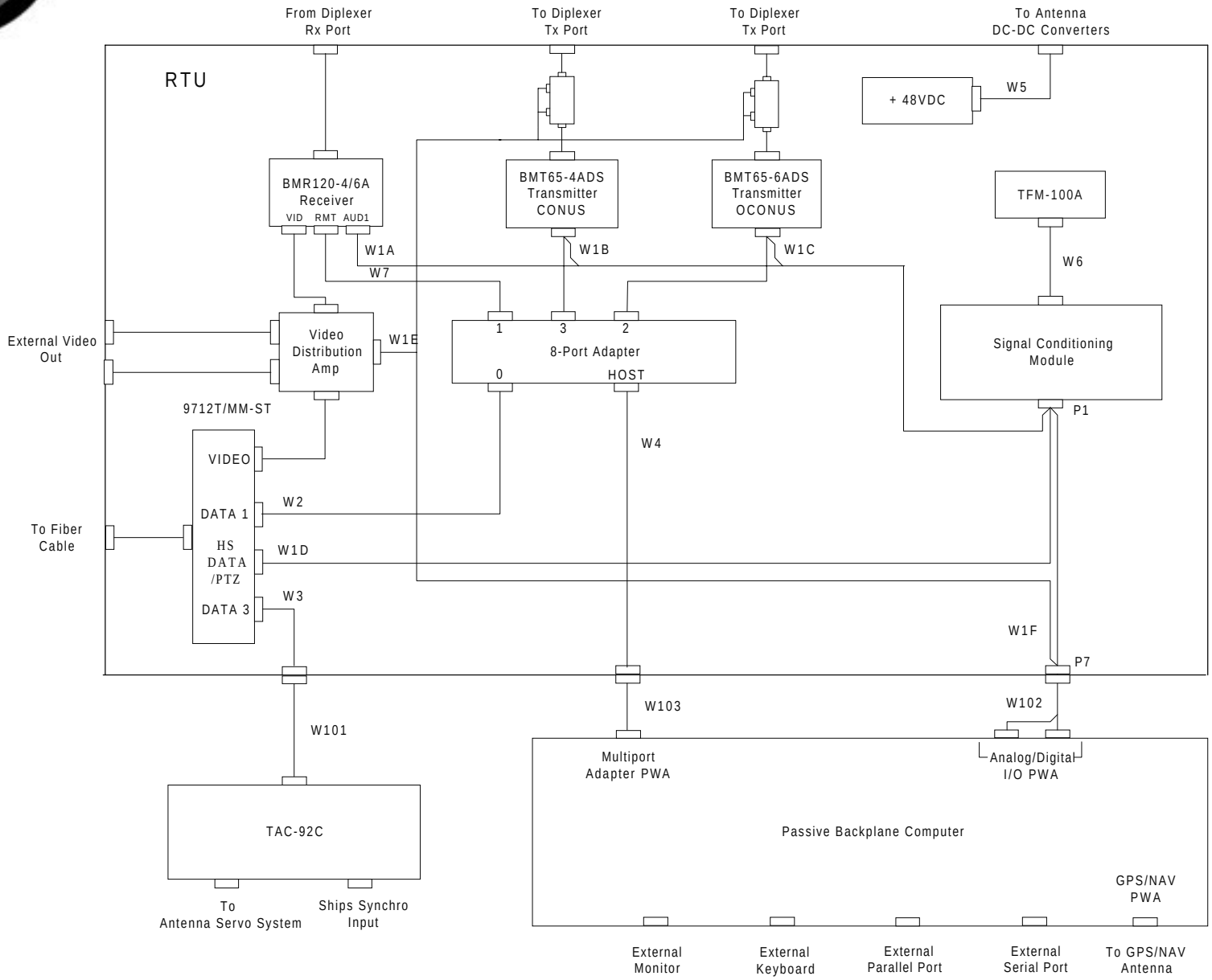

HWCI List

- BMR120-4/6AT: Dual-Band Receiver
- BMT65-4ADS: Transmitter for CONUS Frequencies
- BMT65-6ADS: Transmitter for OCONUS Frequencies
- SCM: Signal Conditioning Module (not COTS) - PC Board
- VDA: Video Distribution Amp (not COTS) - PC Board
- TFM-100A: Converts Baseband to FSK Data for Outrider
- SCU - System Control Unit - ruggedized PC
- Fiber Modem: Send Video Data 400m to TCS Shelter
- ACU - Antenna Control Unit - TAC 92

Data Link Switch Function

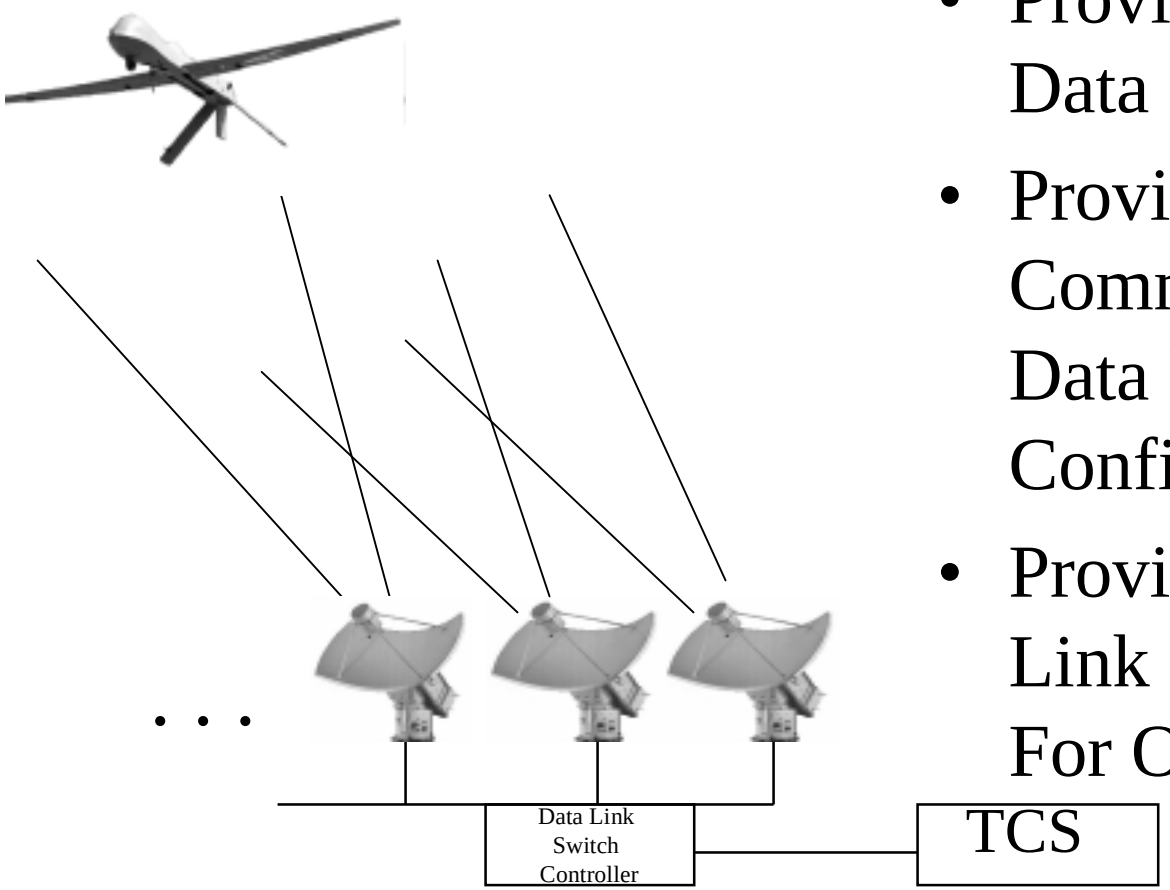

- Provides Data Link Data Path Control
- Provides For AV Command/Telemetry Data Path Configurability
- Provides For Multiple Link Path Coverage For One AV

Data Link Switch Controller(TCS)

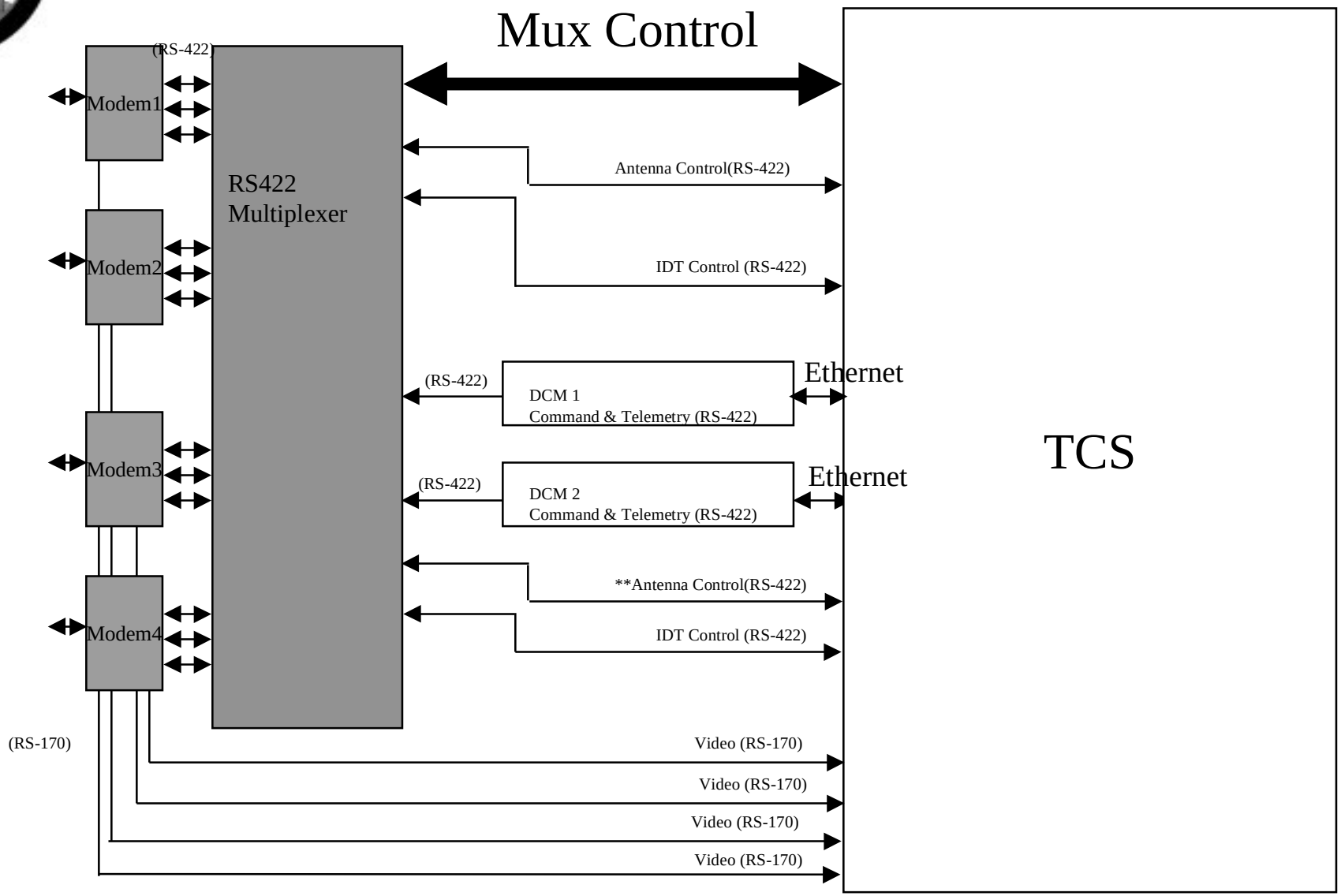

Data Link Data Path Configuration

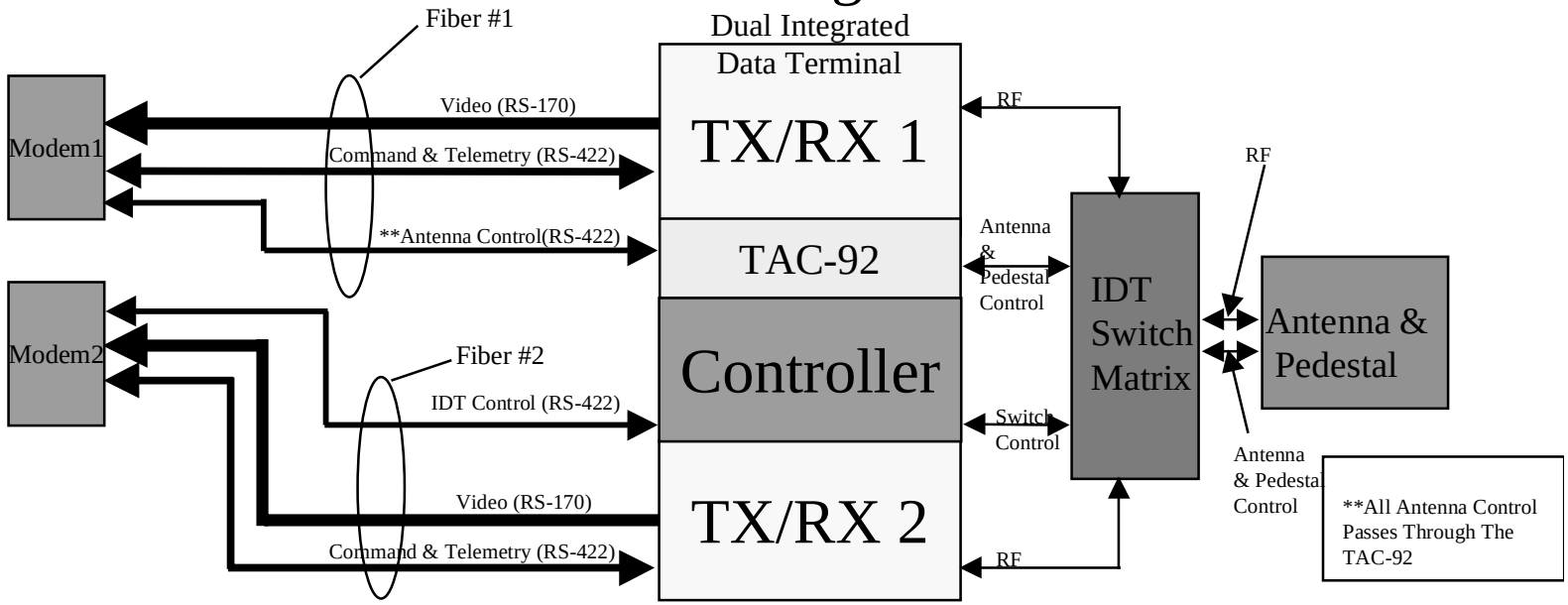

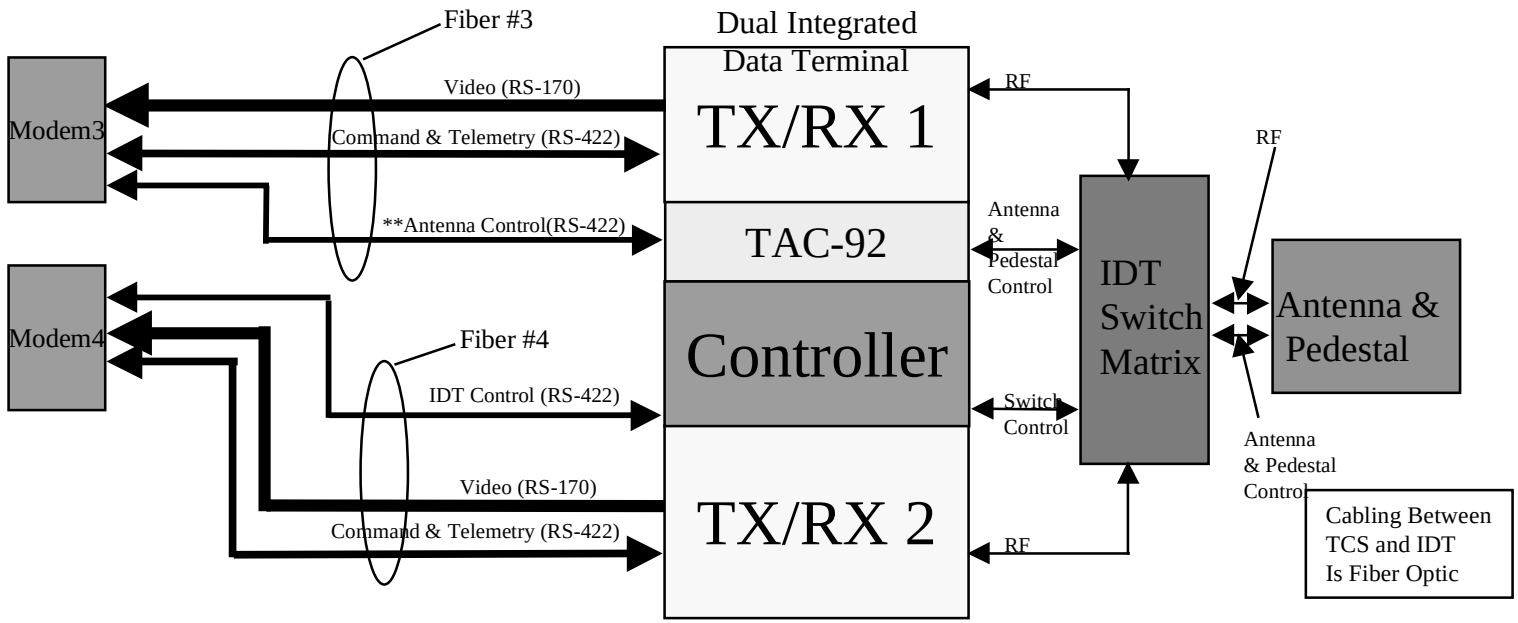

Updated 1/30/97

UAV Data Link Blockage

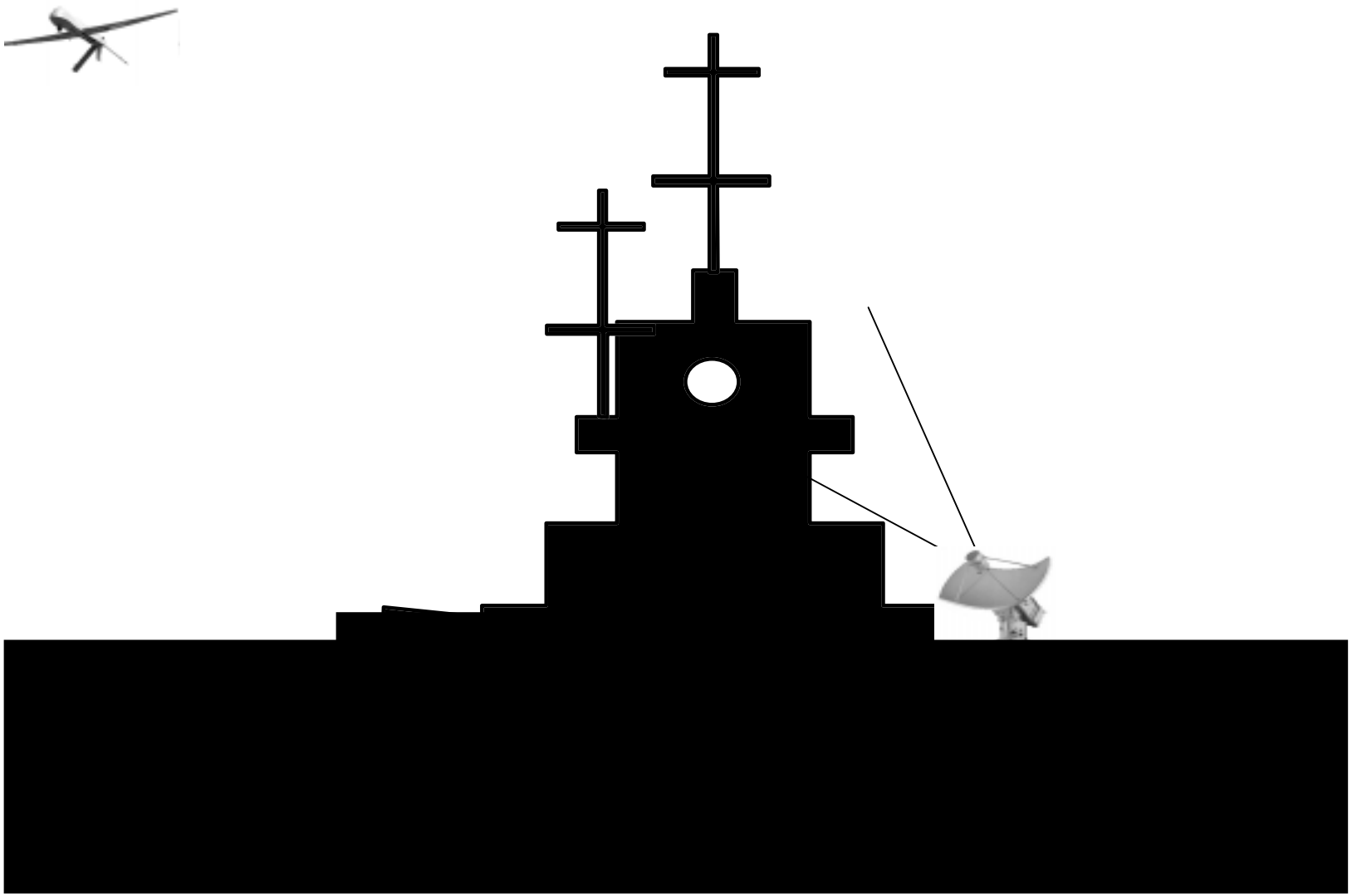

UAV Data Link Blockage Solution

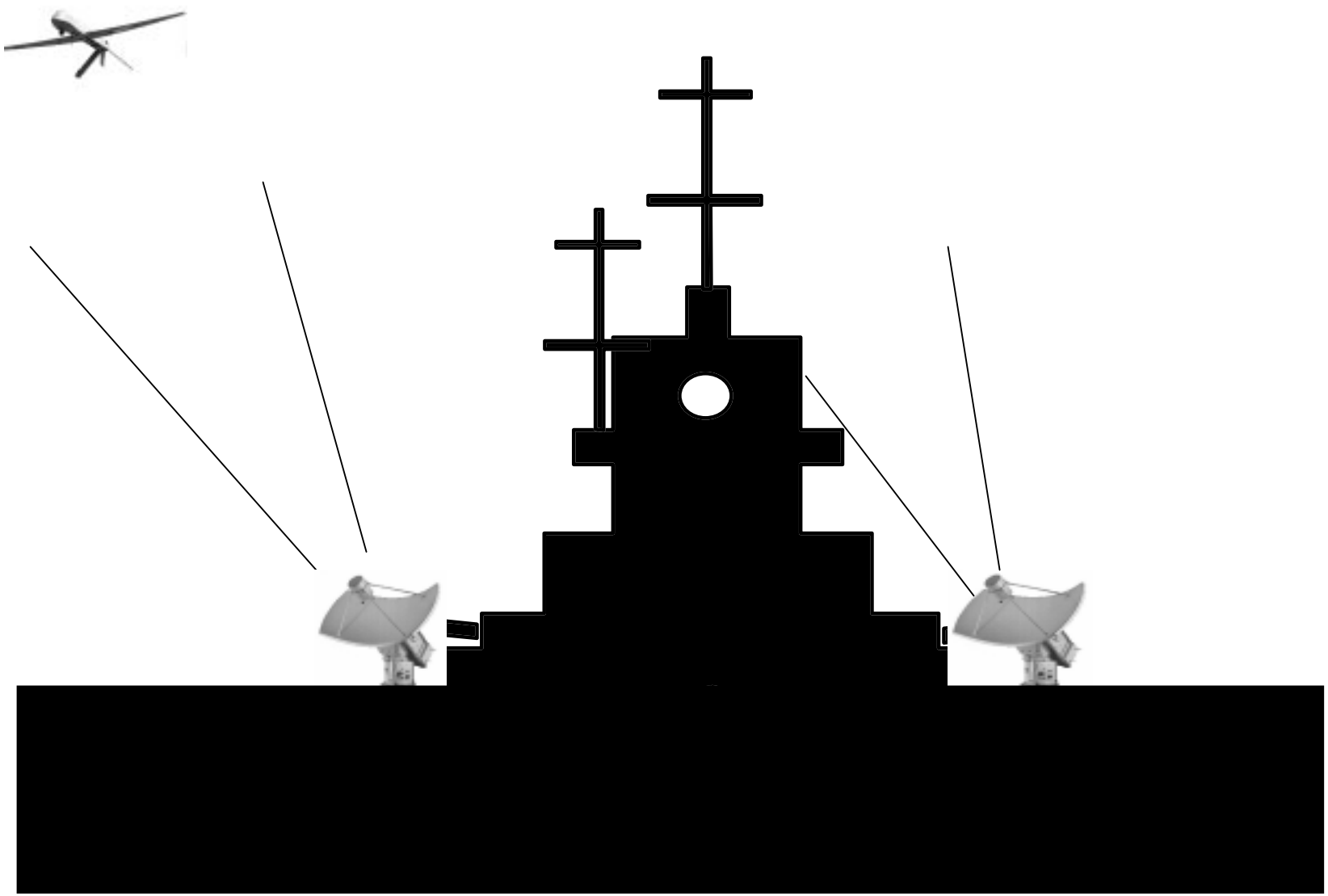

IDT SWITCH MATRIX

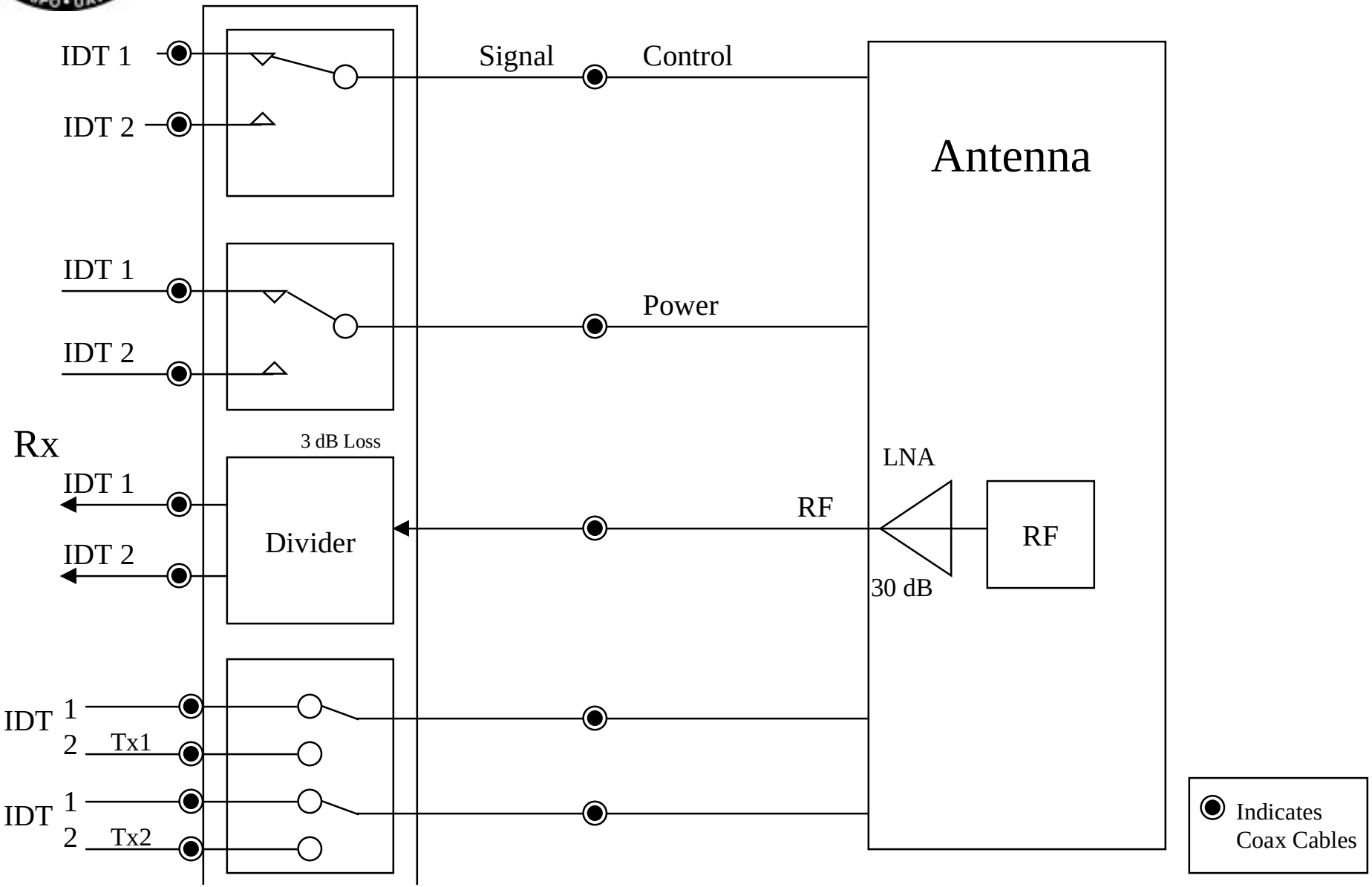

Rack Layout - Prototype Unit

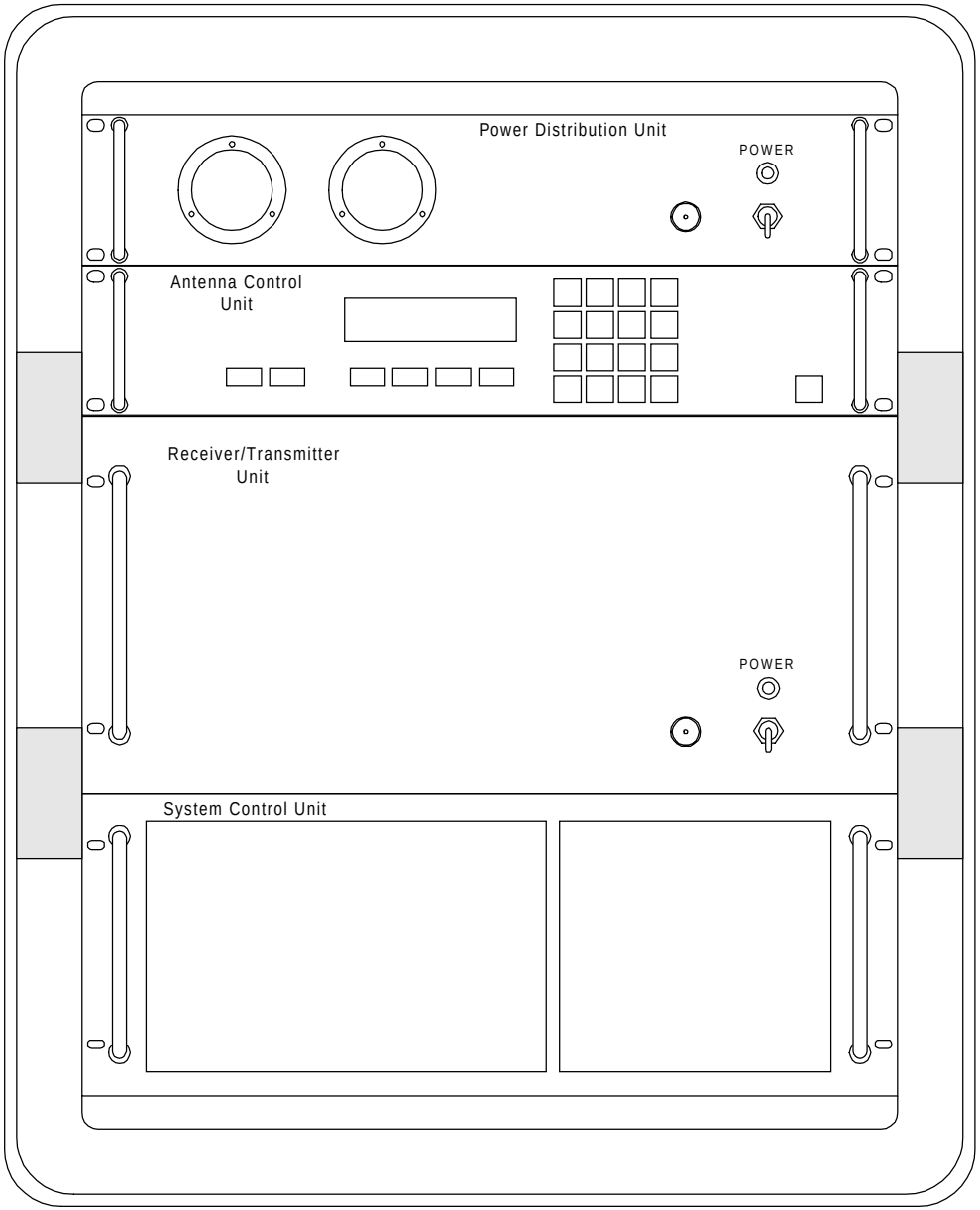

HWCI Physical Data

Major Component	Length	Width	Height	Weight
Power Distribution Unit	13	19	3.5	10
TAC-92C Controller Unit	14	19	3.5	18
Receiver/Transmitter Unit	20	19	8.75	35 (2)
System Control Unit	17	19	7	37
Container (Empty)	32	26	30	20
			Total Weight:	155 lbs.

HWCI IDT Physical Data

Major Component	Power	Packaging	Identification
Power Distribution Unit	110V/ A	Rugged	DI
TAC-92C Controller Unit	110V/ A	Commercial	COTS
Receiver/Transmitter Unit	48VDC	Rugged	DI/W COTS
System Control Unit	110V/ A	Commercial	COTS

*Current TBD

DI - Developmental Item
COTS - Comercial Off The Shelf

Environmental Considerations

<u>Storage</u>

- Temperature
  - -20^0 C to 70^0 C
- Humidity
  - 95% non-condensing
- Altitude
  - 40,000 ft.
- Rain
  - Up to 2 inches per hour
- Wind
  - 30 mph constant, 45 mph gusts

<u>Operating</u>

- Temperature
  - -20^0 C to 40^0 C
- Humidity
  - 95% non-condensing
- Altitude
  - 40,000 ft.
- Rain
  - Up to 2 inches per hour
- Wind
  - 30 mph constant, 45 mph gusts

- Sea (Below-Deck)
  - Temperature
    - 0 to 40^0 C
  - Humidity
    - 0 to 100% at 40^0 C

Data Link Equipment Laydown Concept

- Land-Based System
  - Major components chassis mounted
  - Chassis mounted in shock mitigated container
    - Provides protection
      - Shipping
      - Environmental
- Ship-Based System
  - Ship class dependent
  - Utilize existing ships resources
  - Integrate required components into existing ships equipment racks
  - RTU, SCU, ACU and PDU are rack-mountable if a rack is available

Documentation

- COTS Manuals
  - Programmer's Manual
  - User's Manual
  - Install Guide
- Data Link Interface Design Document
- IDT Control Interface Design Document
- Data Link Subsystem Segment Specification

Reliability/Maintainability/Availability

sociated COTS Documents

n we will start capturing this information

Beyond Line-of-Site Data Links

TCS Data Links Requirements

Threshold	Objective
down link	LOS links will comply with CDL standards
e-of-Site (LOS) and Beyond Line-of-Site (BLOS)	Multiple platforms/payloads simultaneously
with respective UAV program-provided data links for command/control and UAV data	
UAV and MAE-UAV (Predator) ground control stations	
ht & payload control of at least 2 air vehicles (BLOS) using 1 TCS	
n different types of UAVs and UAV payloads across 5 levels of UAV interaction	

Block 0 System

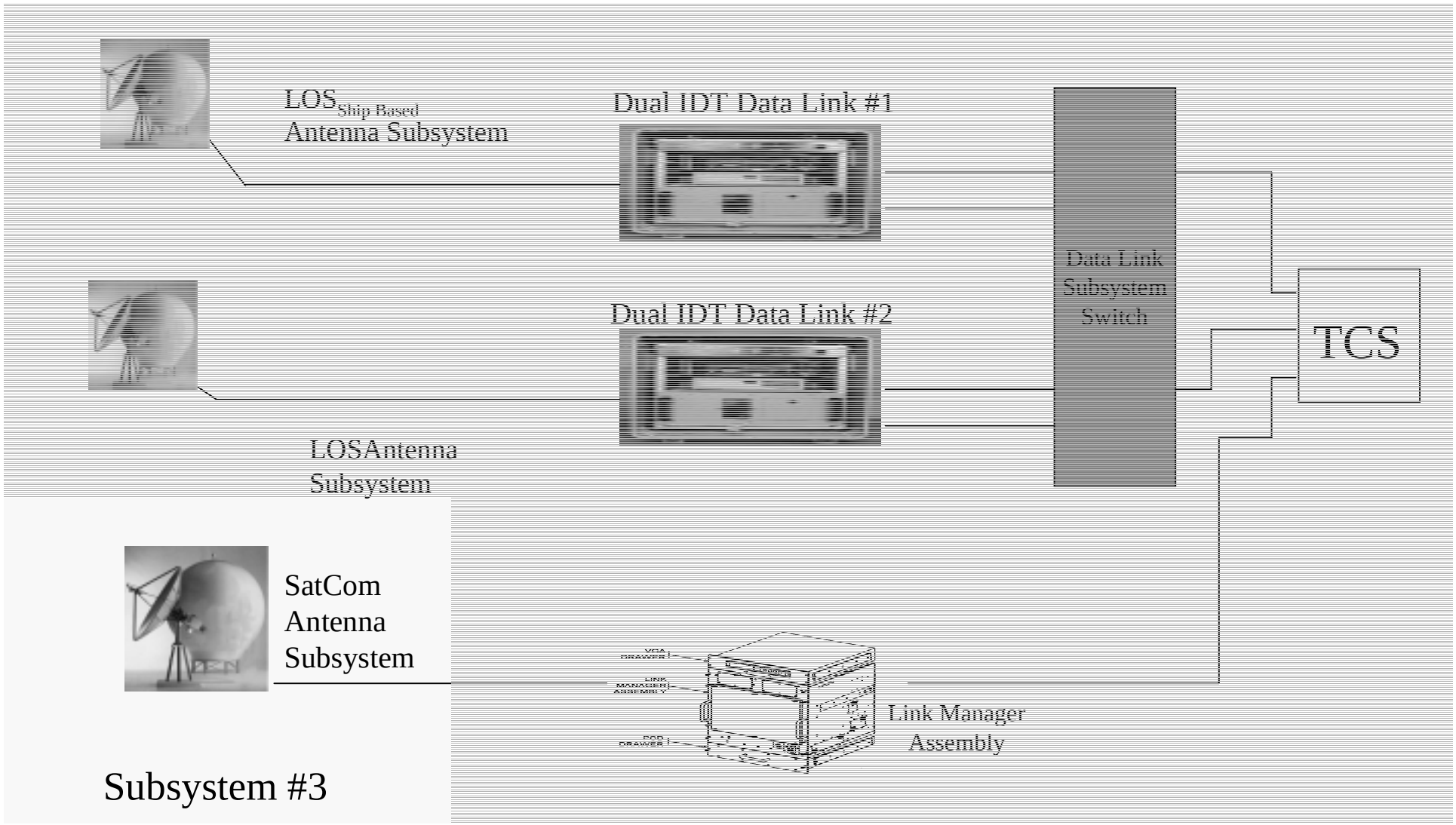

SATCOM Antenna

Land-Based

Functional Description

- SATCOM antenna functions:
  - <u>Command Link</u>
    - Upconvert the command link SATCOM signal from the LMA to Ku-band frequencies for satellite transmission
    - Transmit Ku-band command link signal to Predator Air Data Terminal
  - <u>Return Link</u>
    - Receive Ku-band signal from Predator Air Data Terminal via selected satellite channel
    - Downconvert received Ku-band signal to IF and feed to LMA for conversion to baseband

Predator SATCOM Link

on of Predator range to 500 nmiles

- **Presently only Predator data link that carries SAR processor data**
- **Characteristics:**
  - Return Link - 1.544 Mbps digital link (O-QPSK, FEC) provides EO/IR + telemetry + SAR data. (SAR not presently available on LOS link).
  - Command Link - 64kbps (32kbps reserve), telemetry, Spread Spec
  - Predator Air Data Terminal
    - 100 W Power Amp
    - 30” dish
      - 36.5 dB gain,
      - 2.1^{o} BW
      - G/T = 7.1 dB/K
      - Pol diversity (Horizontal or Vert)

Predator SATCOM Constraints

- Predator Ground Control Station) transmit power constraints drive minimum ground data terminal antenna size

Ground Antenna Size (m)	Link Margin - Return Link (dB)*	
	Intelsat Series 6	Intelsat Series 7
2.4	0.00	3.37
3.0	0.80	4.60
4.0	2.52	6.01
Double hop(6.1m, 2.4m - 1.2m)	----	2.19

* T_1 data rate: 2 dB SATCOM link margin considered acceptable. Margins calculated at maximum RF power out of the Predator.

Another constraint - Predator program office is upgrading SATCOM link to handle 2 T_1 rate, which decreases link margins substantially

Problem - 5.5 meter antenna is fine for most ground applications, but not shipboard applications

Key Specifications for TCS SATCOM Terminal

	Trojan Spirit
Antenna	
Size (m)	6.1
Travel (degrees)	
Azimuth	+/- 10
Elevation	+5 to +90
Tracking Modes	auto acq/track
	Manual
	Memory
Polarization (Ku)	Linear/Adjustable
Transmitter (Ku)	
Freq Range	14.0 to 14.5
EIRP (dBW)	68
Transmitter Type	TWT
Transmit Power Control	Yes
range (dB)	30
Resolution (dB)	0.25
IF Frequency (MHz)	70
Receiver	
Freq Range (Ku)	10.95 to 12.75
G/T	29
IF Range (MHz)	50 to 90 100 to 180
Hot Standby	No

Operational Characteristics

Other: C,X-band operation not required for TCS operations

Key Specifications for TCS SATCOM Terminal

	Trojan Spirit
Antenna Size (m)	6.1
Towing Requirements	5-ton Truck Maximum
Airlift Requirements	C-130
Setup Time	4
Setup Personnel	3
Environmental	
Oper. Wind Loading (mph)	ss - 30 gusts - 45
Surv. Wind Loading (mph)	
Temperature (oper)	-32 to +52 ^{o}C
Rain (in/hour)	2
Ice, snow (in. clr glaze)	1/4
Humidity	95% > -18 ^{o}C

Physical Characteristics

Other: Remote up to 400 meters from TCS trailer

Typical Land-Based SATCOM Antenna (Erected)

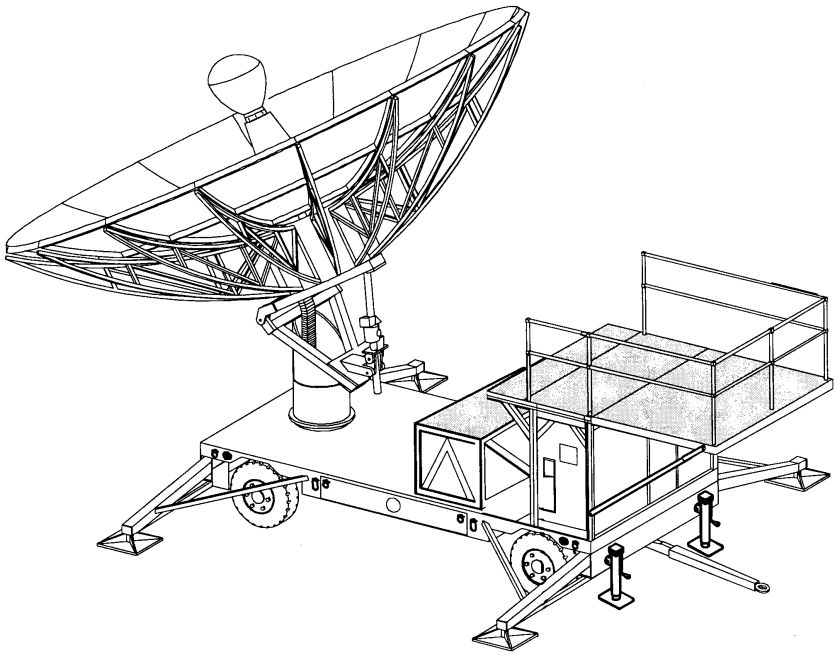

- Setup done either locally or remotely (400m away).
- All RF electronics reside at antenna.

Typical Land-based SATCOM Antenna (Stowed for Travel)

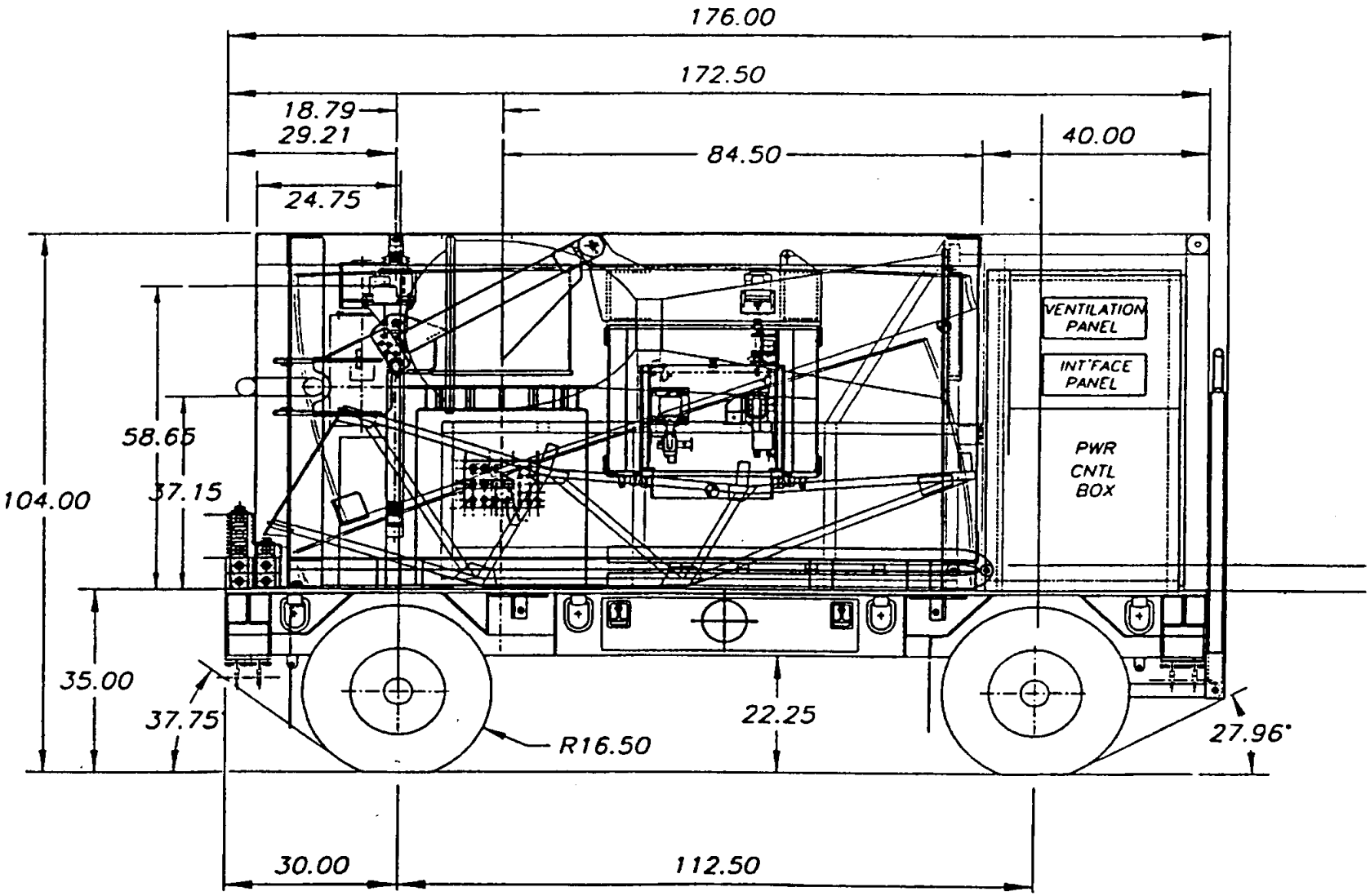

Satellite Terminal Block Diagram

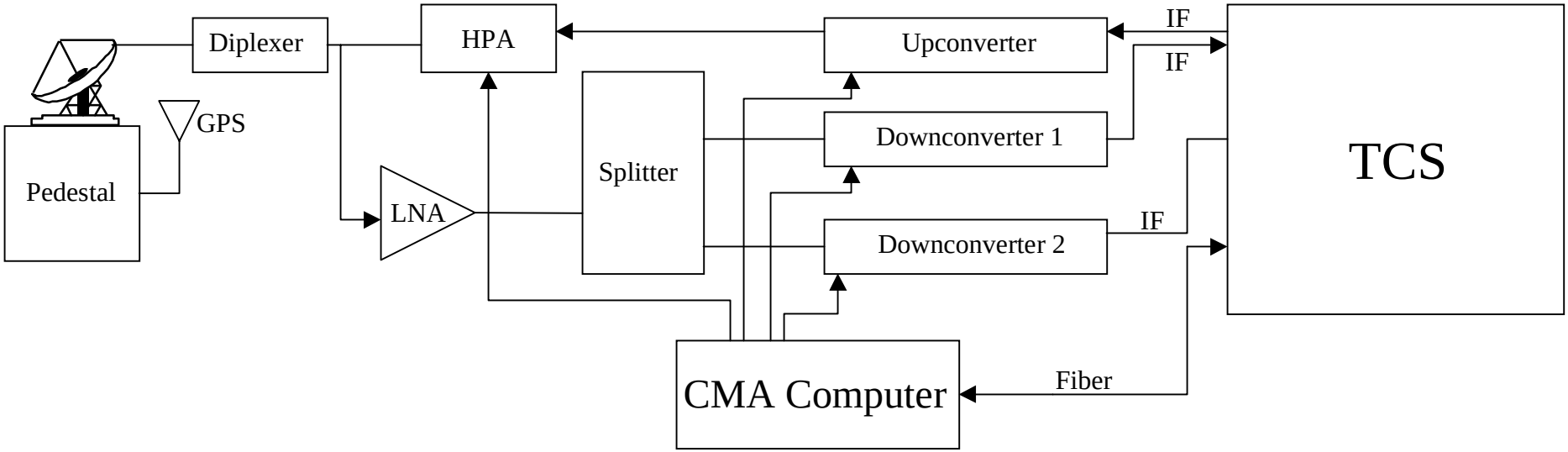

Features

- Relief-on-station configuration - 1 addressable command link, separate return links.
  - Requires 2 downconverters, 2 LMAs/SDTs
  - Constrained to both UAVs in same satellite beamwidth
- No Hot-Standby features
- CMA computer setup accomplished in TCS trailer
- Antenna system can be remoted up to 400 meters from TCS site
- Audio/Video alarm in TCS trailer in case of equipment failure
- Remote site telephone via fiber - option

HWCI/SWCI List

HWCIs*	SWCIs
antenna	
pedestal	pointing control
diplexer	
HPA	HPA control/monitor
LNA	
splitter	
upconverter	upconverter control/monitor
downconverter (2)	downconverter control/monitor
CMA computer	CMA computer interface driver
GPS	
Fluxgate Compass	

*All HWCIs are COTS

External Interfaces

CMA Computer ⟷ TCS
IF Downlink ⟶ LMA/SDT
IF Uplink ⟵ LMA/SDT
Telephone ⟷ TCS (Optional)

Additional Data

- Documentation
  - COTS Manuals
    - Programmer’s Manual
    - User’s Manual
    - Install Guide
- EMI Compatibility - TBD
- Packaging - Ruggedized/COTS
- Power Requirements - TBD

SATCOM Antenna

Ship-based

INTRODUCTION

lized Antenna System, Model 9697-4, Manufactured by Sea Tel, Incorporated

Diameter Reflector

Satellite Voice/Data Communications

Azimuth feature allows uninterrupted communications regardless of vessel turning motions

nent permits unattended operation except for start-ups or change of Satellites.

lized Antenna System consists of two major groups

ck Group

ck Group

FUNCTIONAL DESCRIPTION

on

ıbilization provides free motion with 3 degrees of freedom

enna pointed motionless while ship rolls, pitches and yaws

ction torque motors attached to each of the 3 axis provide the required force to overcome disturbing torques

FUNCTIONAL DESCRIPTION (CONT' D)

evel cage sensors to calculate the amount of torque required in each axis to keep the antenna pointed within +/- 0.2 degrees

s all antenna motion to the PCU

commands are converted to a 5 volt differential analog signal by a D/A converter and sent to each of the Servo Amplifiers

n and elevation reference is provided by a two axis tilt sensor in the level cage assembly

ence is provided by combining the ship gyro compass input and the relative position

FUNCTIONAL DESCRIPTION (CONT' D)

tically calculates the Azimuth Elevation and Polarization Pointing Angles (POLANG) based on the ship' s latitude, longitude, and desired Satellite longitude position obtained by GPS

e Pattern Search automatically scans the area for a desired Satellite if no signal is found

acking

ng

erns

cations Monitor (M&C) Interface allows external control of the DAC-97 from a PC or ASCII Terminal

Antenna

Antenna Block Diagram

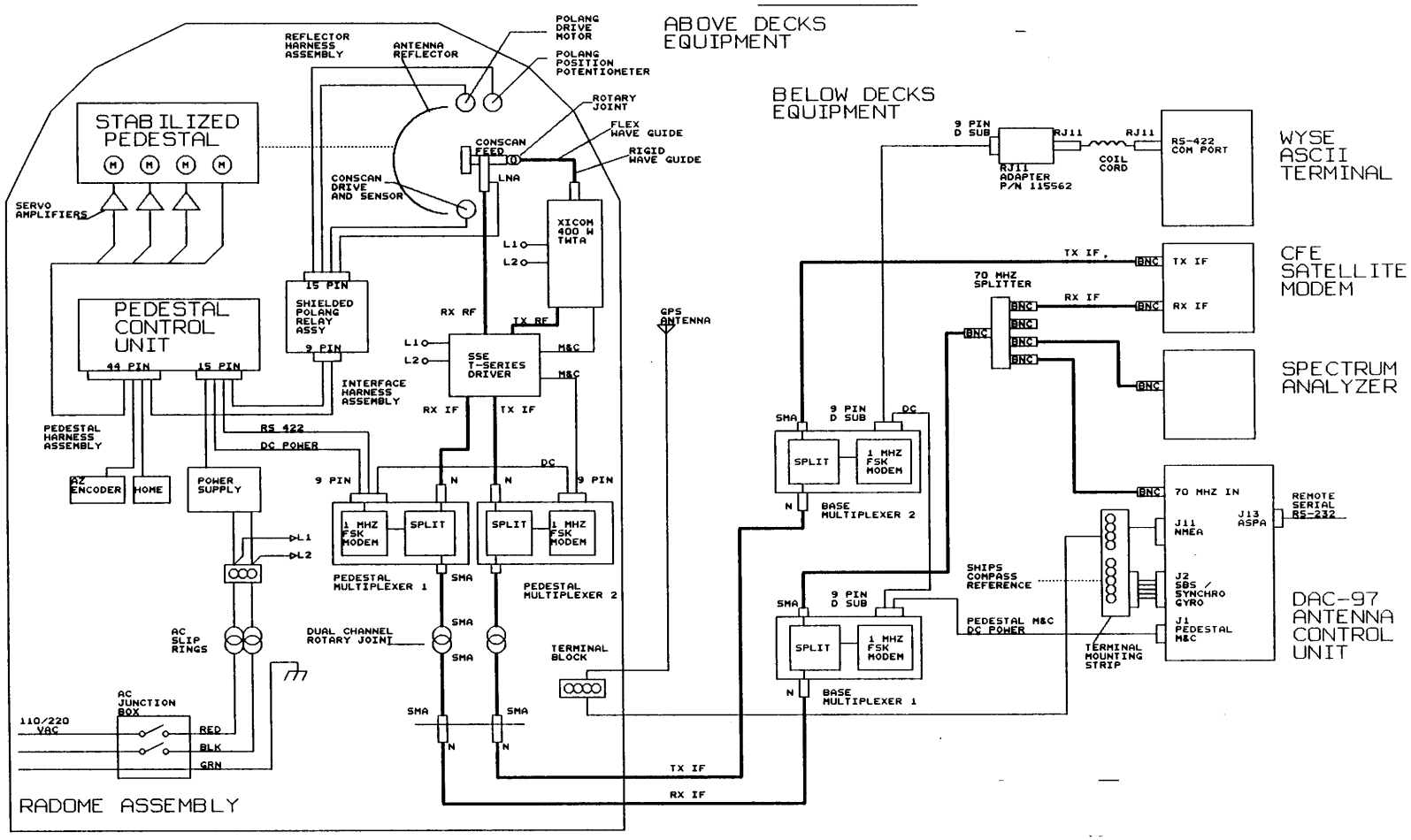

KU-BAND STABILIZED ANTENNA SYSTEM RF FUNCTIONAL BLOCK DIAGRAM

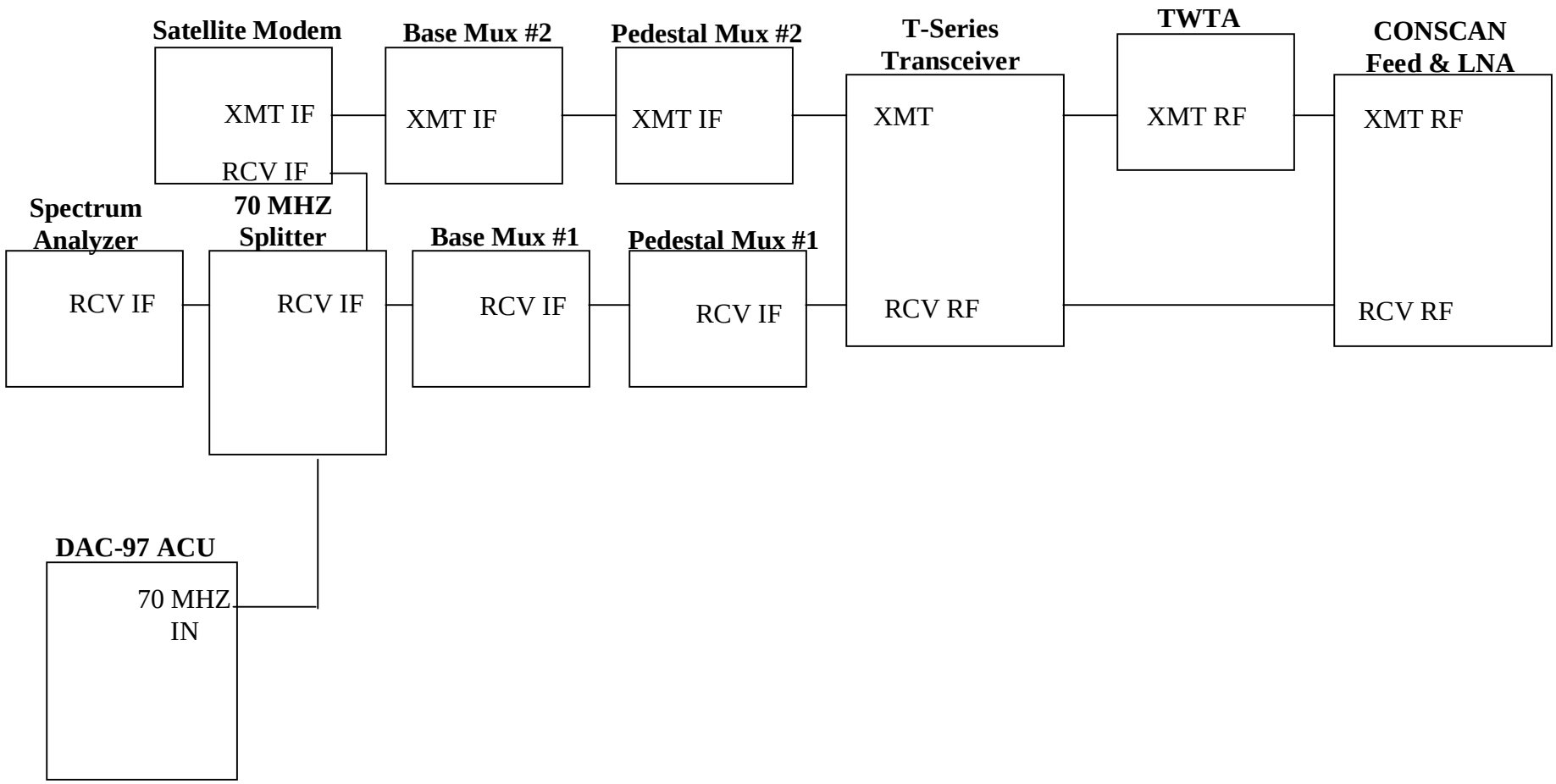

KU-BAND STABILIZED ANTENNA SYSTEM CONTROL FUNCTIONAL BLOCK DIAGRAM

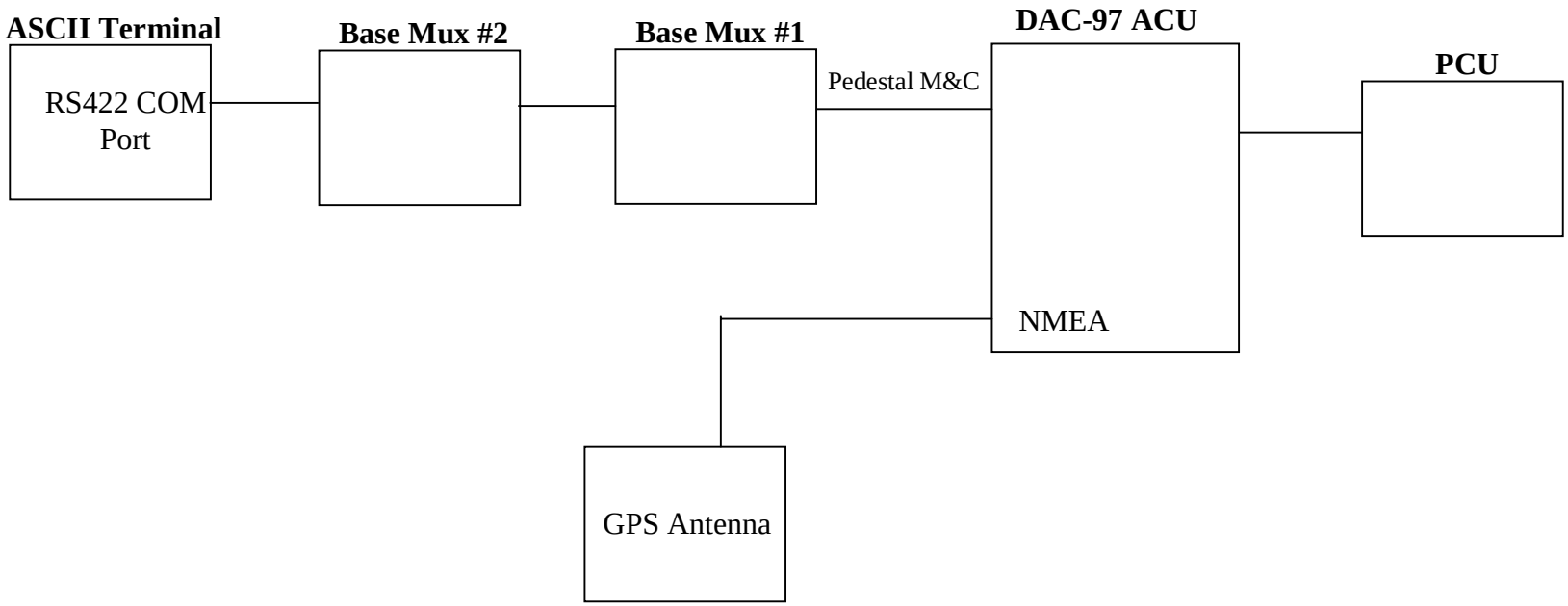

HWCI

eck

AC-97 Antenna Control Unit (ACU)

U Radio Package

tellite Modem

ectrum Analyzer

YSE ASCII Terminal

eck

ıtenna Reflector

ed, Filter and LNA Assembly

gh Power Amplifier

DU Radio Package

ıbilized Antenna Pedestal Assembly

destal Control Unit (PCU)

ılimited Azimuth Multiplexers

ıdome Assembly

KU-BAND STABILIZED ANTENNA SYSTEM ELECTRICAL PARAMETERS

flector

ıency Range

RCV 10.95 - 12.75 GHZ

XMT 14.00 - 14.50 GHZ

RCV 47.5 dB at 12.5 GHZ

XMT 48.6 dB at 14.0 GHZ

and LNA Assembly

ıency Range

RCV 10.95 - 12.75 GHZ

Polarization Right Hand Circular (RHC)

Amplifier

ut Power 300 watts TWTA

s Driver (Radio Package)

S between 10.95 and 12.75 GHZ

'S between 14.00 and 14.50 GHZ

face 70 ± 18 MHZ IF signal

Below-Deck

DAC-97

RF Tracking Input

950 - 2050 MHZ (WB)

950 - 1750 MHZ (WB)

60 - 80 MHZ (NB)

Input Level

-65 to -20 dBm (WB)

-90 to -30 dBm (NB)

RS-232 Monitor and Control Interface

COMMS parameters 4800/9600 Band

Interface Protocol RS-232 or RS-422

External AGC Input 0 - 5 Volts DC

Spectrum Analyzer

Frequency Range 0 - 1000 MHZ

PHYSICAL DATA

eflector

neter 2.5 M (94 in.)

al length 0.92 M (35.4 in.)

ght 26 Kg (57 pounds)

ontrol Unit (PCU)

4 x 7 x 1.5 inches

ssembly

neter 126 in.

ght 122 in.

h size 18 in. x 36 in. high

alled height 140 inches

- Installed weight with antenna 1200 lbs

- Below-Deck
  - DAC-97
    - Width 19 in.
    - Height 3 5/8 in.
    - Length 14 1/4 in.
- WYSE ASCII Terminal
  - Width 12 3/4 in.
  - Height 11 3/4 in.
  - Length 13 in.
- Spectrum Analyzer
  - Width 11 1/2 in.
  - Height 5 1/8 in.
  - Length 12 1/4 in.

POWER REQUIREMENTS

0 or 220 volts AC

0 V/A for 400 watt system

0 or 220 volts AC

V/A

ENVIRONMENTAL CONSIDERATIONS

quipment

ture

25^0 C to 55^0 C

y

p to 100% at 40^0 C

urvive ice loads of 4.5 pounds per square foot.

- Rain
  - Up to 4 inches per hour.
- Vibration
  - Withstand externally imposed vibrations in two horizontal directions and in the vertical direction.
- Corrosion
  - Parts are corrosion resistant or treated to endure effects of salt air and salt spray.

- Below-Deck Equipment
  - Temperature
    - 0 to 40^0 C
  - Humidity
    - 0 to 100% at 40^0 C

System Documentation

peration Manual for Sea Tel Models: 8297, 9697-4, 9697-5 KU-Band Unlimited Azimuth Transmit/Receive System

tallation Manual Model XT-400 Antenna Mounted TWT Power Amplifier

Single, Dual and Tri-Band Operation and Maintenance Manual OM-043450

peration Manual Sea Tel Model DAC-97 Tracking Antenna Controller

’ s Guide

Satellite Data Terminal

Block 0 System

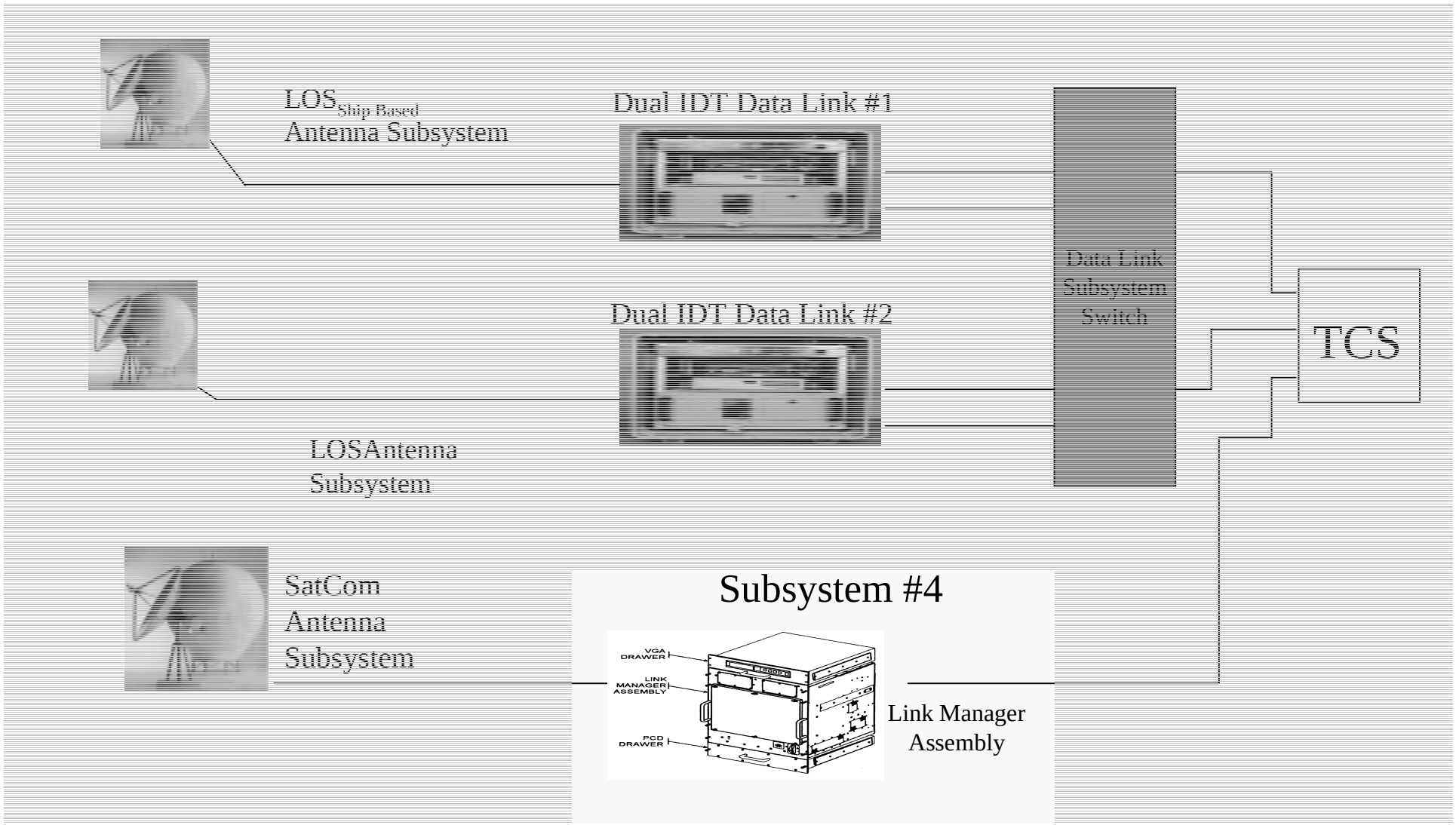

Functional Description

- <u>Command Link</u>
  - Accepts baseband (telemetry uplink + scripts) and upconverts to 70 MHz for transmission via the SATCOM antenna terminal (sea or land)
  - Data Link control built into uplink telemetry stream
- <u>Return Link</u>
  - Receives 70 MHz IF from SATCOM antenna terminal (sea or land)
  - Downconverts to baseband
  - Demultiplexes signal being received (TEL + EO/IR + SAR)
    - Telemetry output in General Atomics format
  - Outputs received sensor data to appropriate sensor

Performance Requirements

- Functional replacement for link manager assembly at reduced cost, size
  - Supports ATC radio SATCOM configuration
    - Outputs 200 kbps command link
    - Demultiplexes/decodes T_1* and 2 T_1 (selectable) return link rate
    - Outputs baseband signal at T_1 or 2 T_1 data rate to LOS link
  - Supports 70 MHz IF
  - 1 LMA/SDT supports 1 BLOS link (multiple UAV control BLOS requires multiple LMA/SDT units)
  - Presently no red/black separation requirements

* Not the same T_1 rate as in present LMA. For smaller antennas, T_1 rate would be selected

Predator Usage of $2T_1$ Return Link Data Rate

The ATC Radio modification increases the return link data rate to $2T_1$ + 112 Kb/sec. The following table documents the structure of multiplexed return link:

Mode:	Sync	40Kbps TM	ATC Voice	SAR(VQ)	External Serial #1	External Serial #2	Video (VQ)	Comments
1:	Yes	Yes	Yes	T_1	T_1	0	0	"Shared"
2:	Yes	Yes	Yes	T_1	$0<x<T_1$*	$T_{.1}$-x*	0	"Shared"
3:	Yes	Yes	Yes	T_1	0	$T_{.1}$	0	"Shared"
4:	Yes	Yes	Yes	0	T_1	0	$T_{.1}$	"Shared"
5:	Yes	Yes	Yes	0	$0<x<T_1$*	$T_{.1}$-x*	$T_{.1}$	"Shared"
6:	Yes	Yes	Yes	0	0	$T_{.1}$	$T_{.1}$	"Shared"
7:	Yes	Yes	Yes	0	$2T_1$	0	0	"External"
8:	Yes	Yes	Yes	0	$0<x<2T_1$*	$2T_{.1}$-x*	0	"External"
9:	Yes	Yes	Yes	0	0	$2T_{.1}$	0	"External"
10:	Yes	Yes	Yes	0	0	0	$2T_{.1}$	"Internal"

* => External ports are selectable in 64 Kb/sec steps

Multiple UAV SDT Configuration

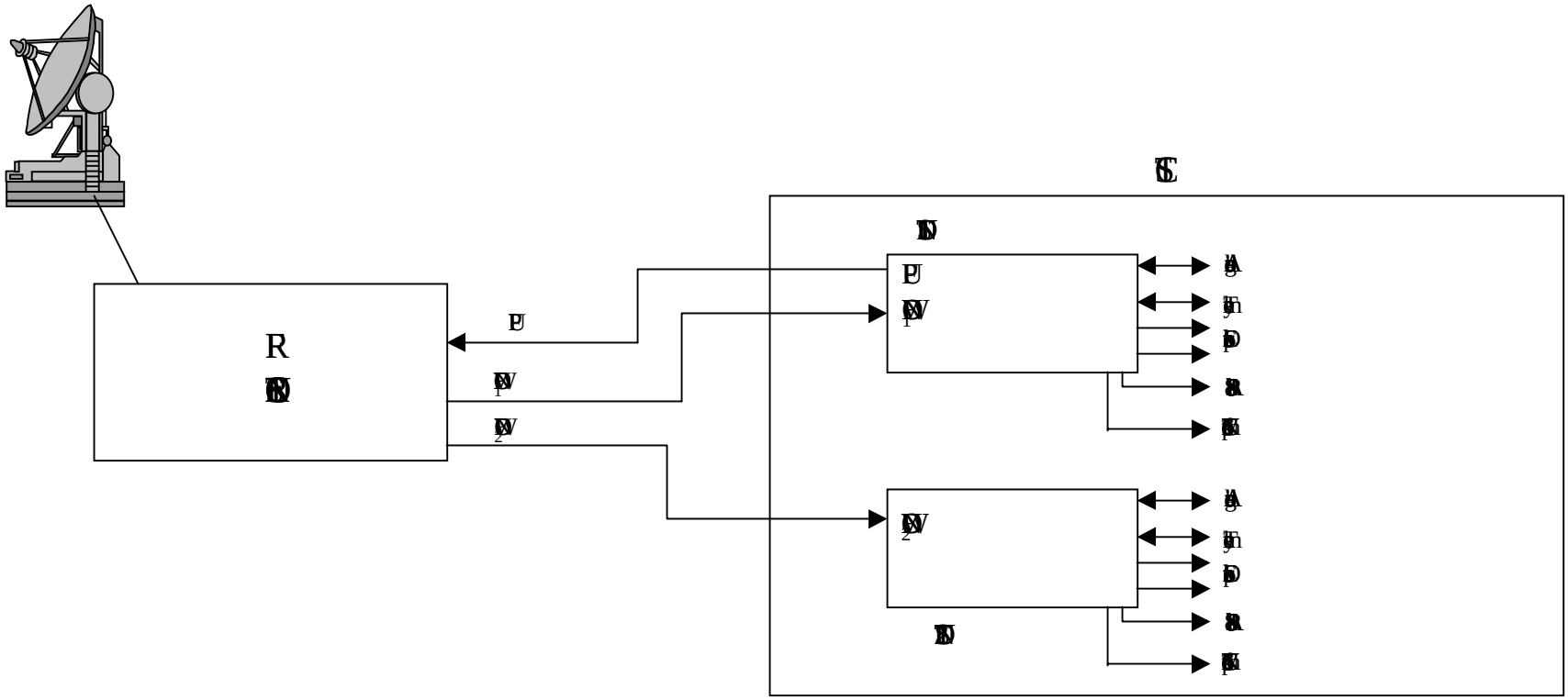

SDT Physical Rack Concept

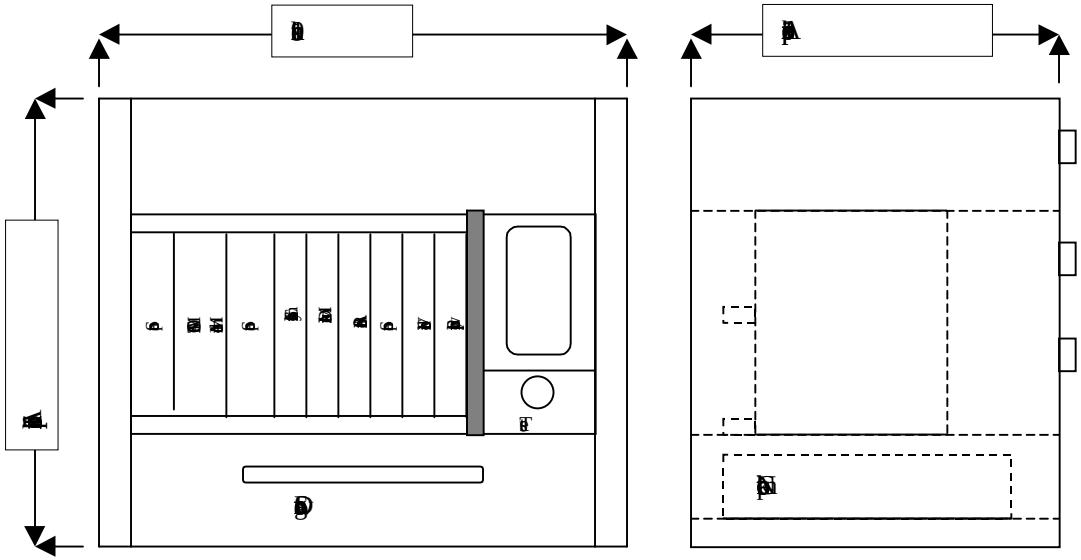

System External Interfaces

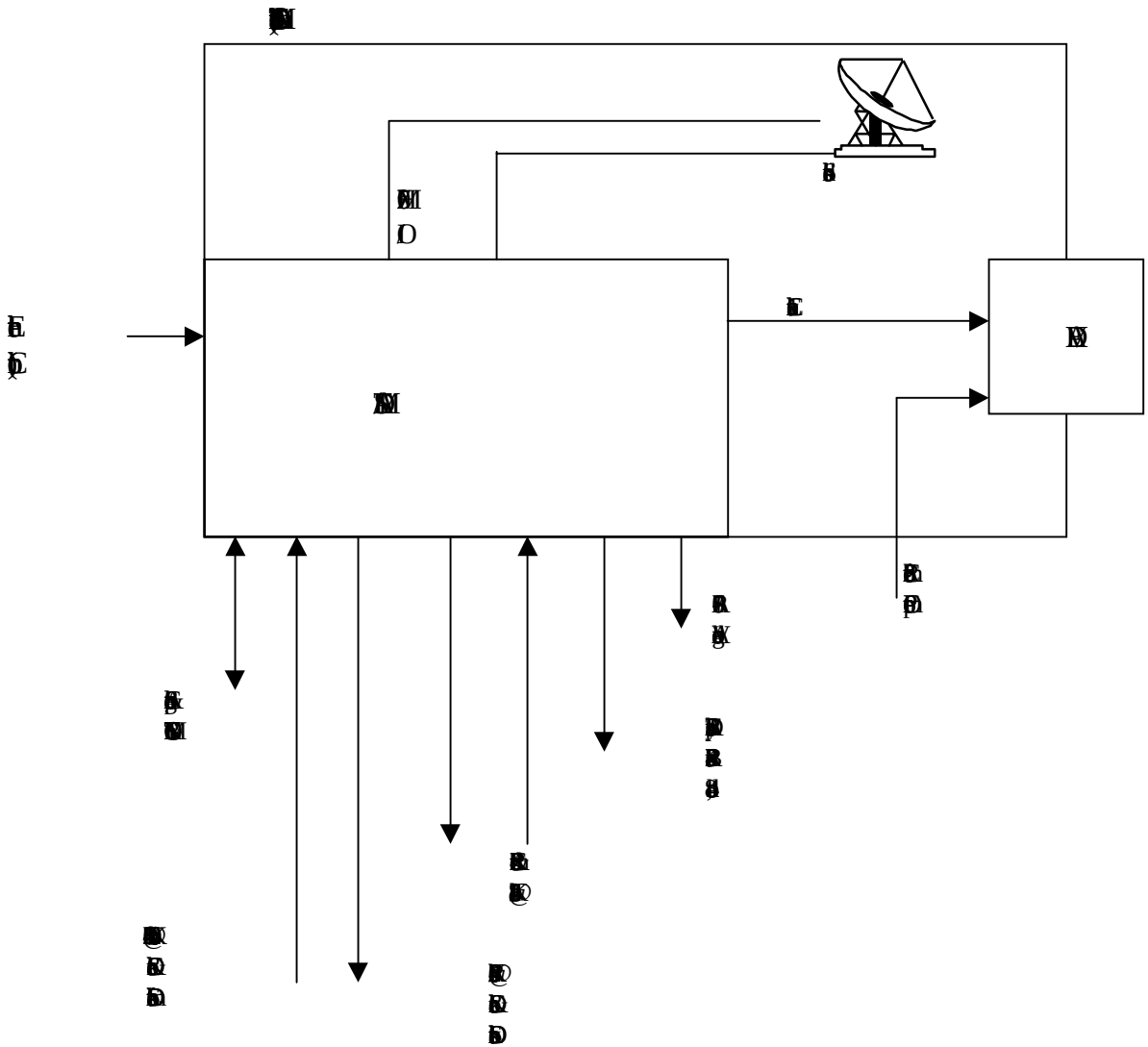

IDT Parts List

DESCRIPTION	Quantity	DESCRIPTION	Quantity
ANT CONTROL UNIT	1	GPS NAVIGATION CARD	1
TRANSMITTER	1	GPS ANT AND 20 FOOT CABLE	1
TRANSMITTER	1	GPS SOFTWARE DRVR FOR W95	1
RECEIVER	1	COMPUTER BACKPLANE	1
MODEM	1	MULTIPORT ADAPTER	1
HEATSINK	1	INTERFACE PANEL 8-PORT	1
SINGLE FIBER MODEM TX	1	ANALOG & DIGIATL I/O CARD	1
SINGLE FIBER MODEM RX	1	TRITON II PENTIUM CARD	1
AC/DC ADAPTER	1	16MB MEMORY SIMM	1
PSK XMTR	1	2.2GB EIDE HARD DRIVE	1
VIDEO AMP	1	32 SWITCH REED RELAY CARD	1
COAXIAL RELAY	1	CABLE ASSY FOR B-SIDE CON	1
FIBER CABLE ON REEL	1	CABLE ASSY, 18 INCHES	1
FIBER CABLE VEHICULAR MOUNT	1	TLM DECOMMUTATOR/BIT SYNC	1
CARRYING CASE FIBER CABLE	1	VIDEO OVERLAY CARD	1
POWER SUPPLY, +28 VDC	1	SHIPPING CONTAINER/RACK	1
POWER SUPPLY, +14 VDC	1	MECHANICAL CHASSIS NO. 1	1
POWER SUPPLY, +/-5 VDC	1	MECHANICAL CHASSIS NO. 2	1
POWER SUPPLY, +/-12 VDC	1	MISC HARDWARE	1
ATTENUATOR	1		