AIR VEHICLE COMMUNICATIONS SUBSYSTEM

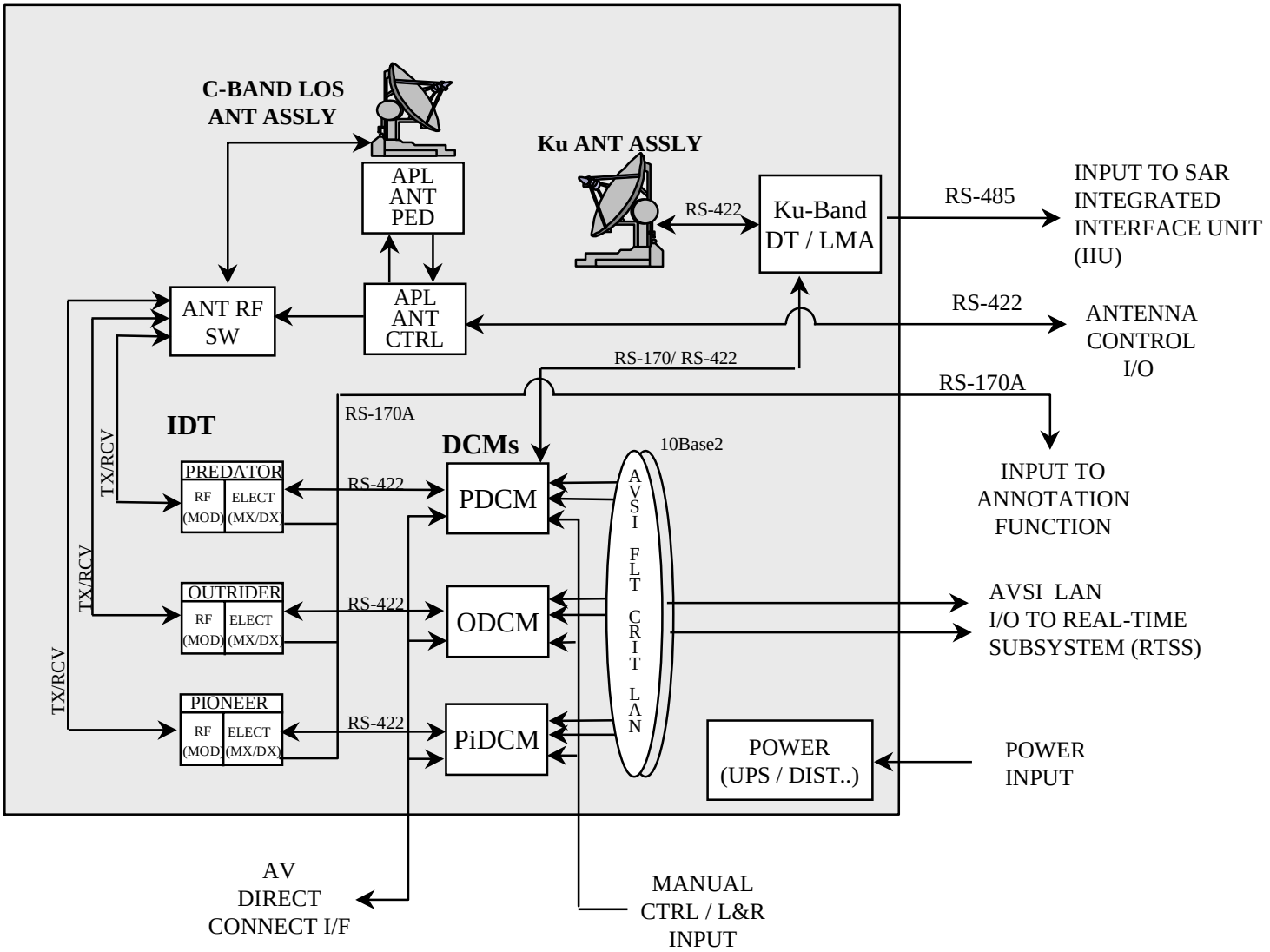

PREDATOR INTERFACE

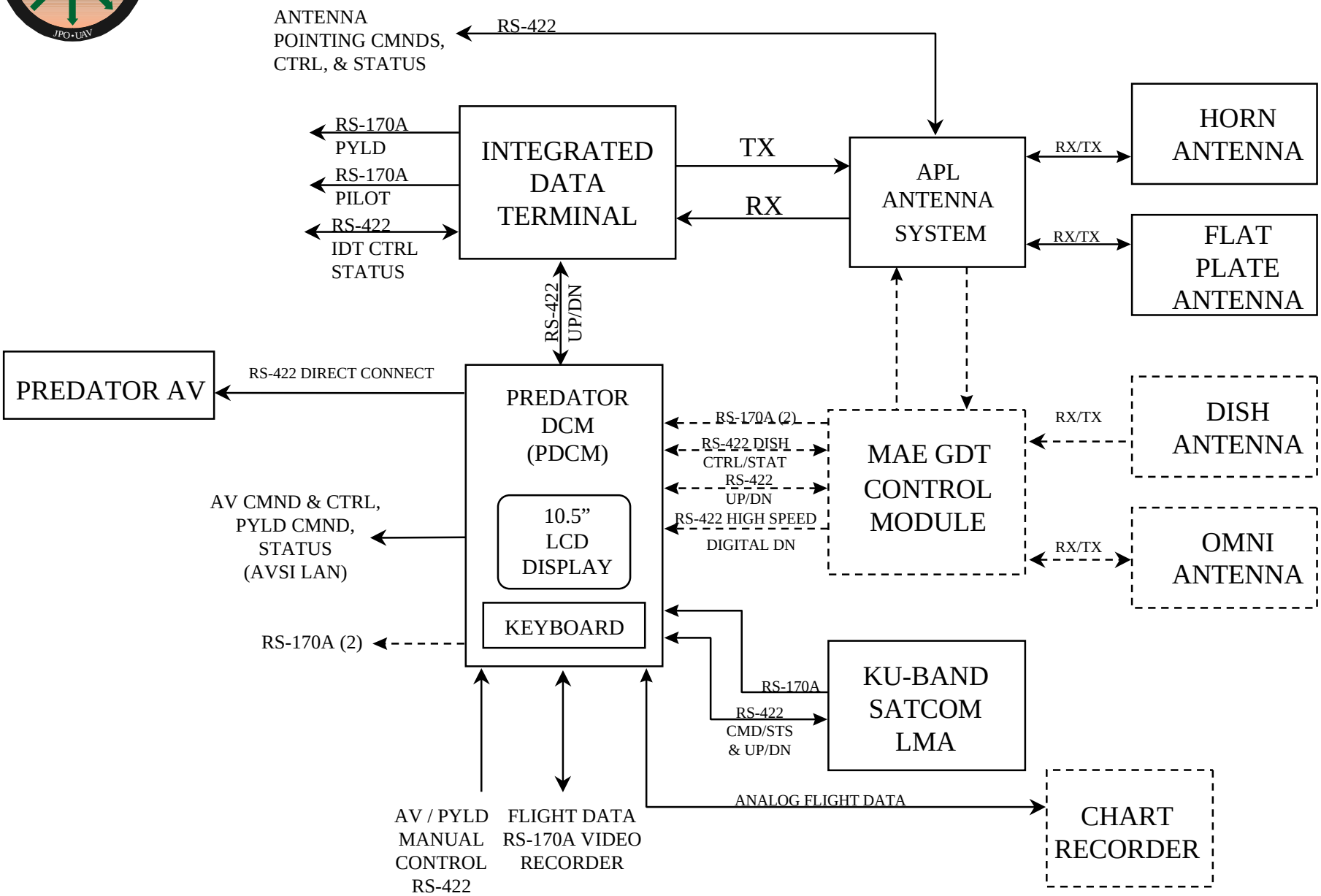

OUTRIDER INTERFACE

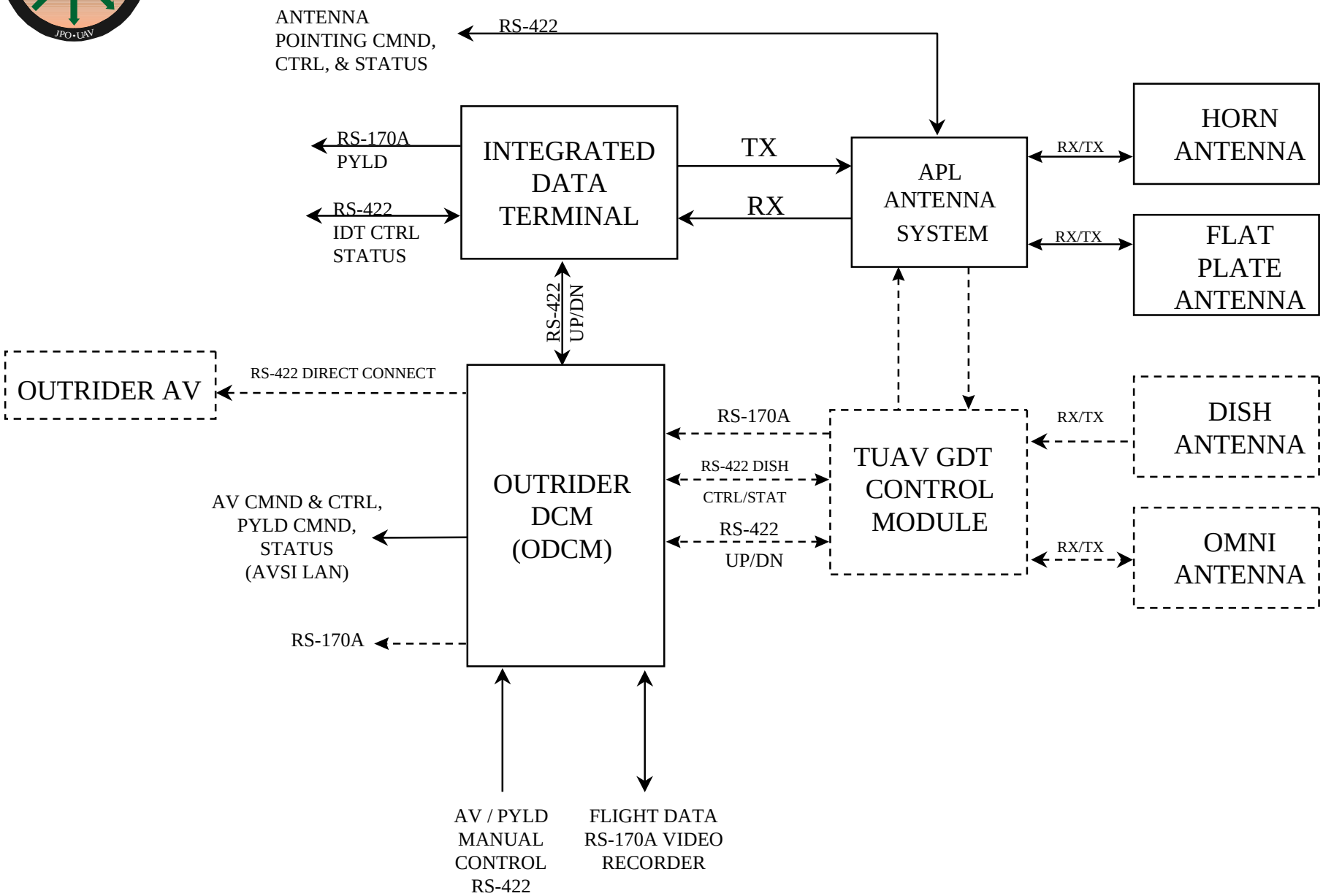

REAL-TIME SUBSYSTEM

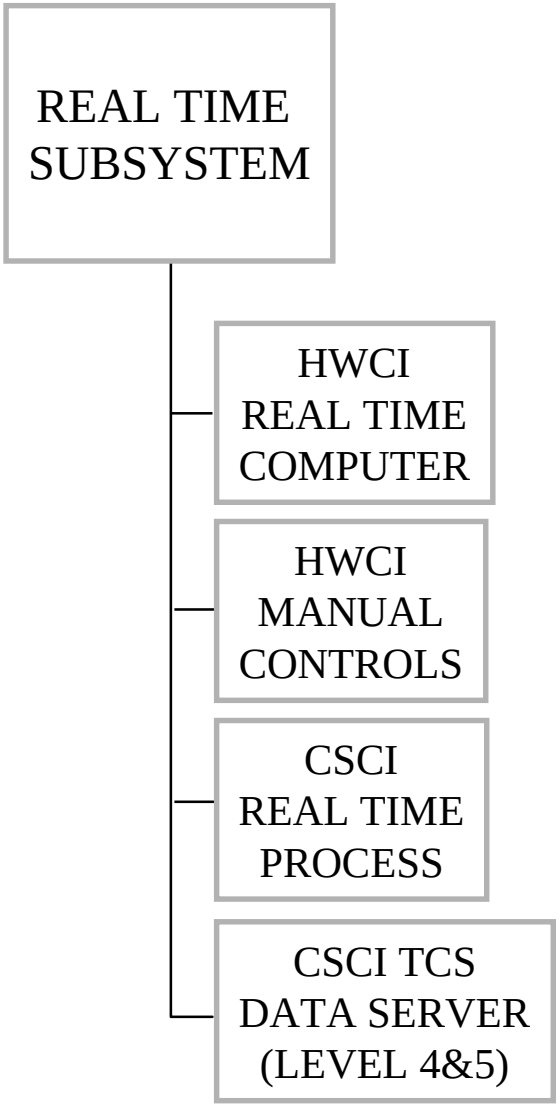

REAL TIME SUBSYSTEM

- PROVIDE REAL TIME PROCESSING TO TCS
- MANUAL CONTROLS INTERFACE PROCESSING
- MONITOR & RECORD TELEMETRY ELEMENTS
- PROVIDE SYSTEM FUNCTIONALITY TO RECEIVE AND INTERPRET MISSION DATA FROM DCM
- NAVIGATION SYSTEM INTERFACE
- AUTOMATED LAUNCH AND RECOVERY SYSTEM INTERFACE (BLOCK 1)
- ANTENNA CONTROL
- TCS DATA SERVER

REAL-TIME SUBSYSTEM (RTSS)

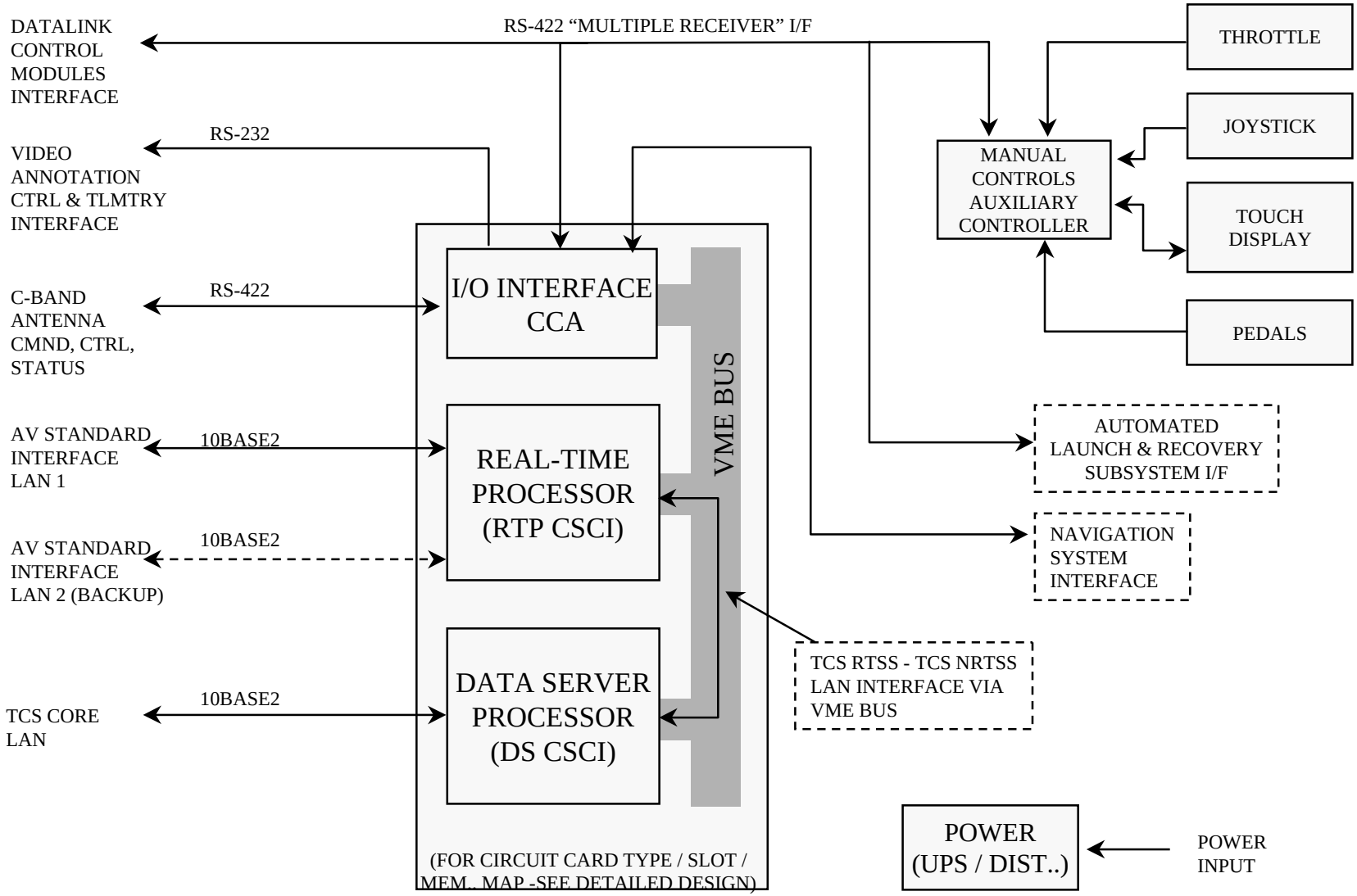

PAYLOAD SUBSYSTEM

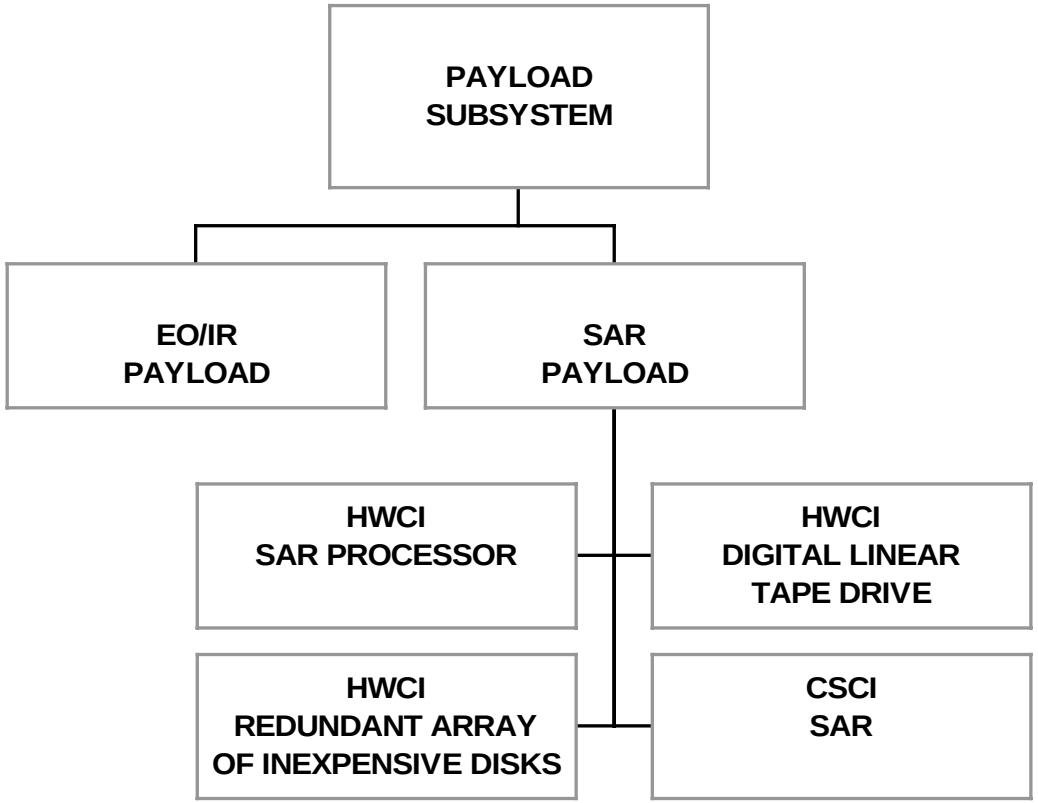

PAYLOAD SUBSYSTEM

- SAR PROCESSOR
  - PROCESS RAW SAR DATA
  - DISPLAY ON OPERATOR STATION
  - RECORD AND STORE SAR DATA
  - SAR PAYLOAD CONTROL
  - SAR IMAGERY VIEWER
  - DATA ACQUISITION, STORAGE, RETRIEVAL
  - GENERATE SAR NITF FILES
  - TRANSFER SAR NITF TO TCS CSCI FOR SUBSEQUENT IMAGERY EXPLOITATION BY C4I SYSTEMS
- EO/IR
  - CONFIGURATION ELEMENT FOR FUTURE DIGITAL EO/IR

SAR SUBSYSTEM BLOCK DIAGRAM

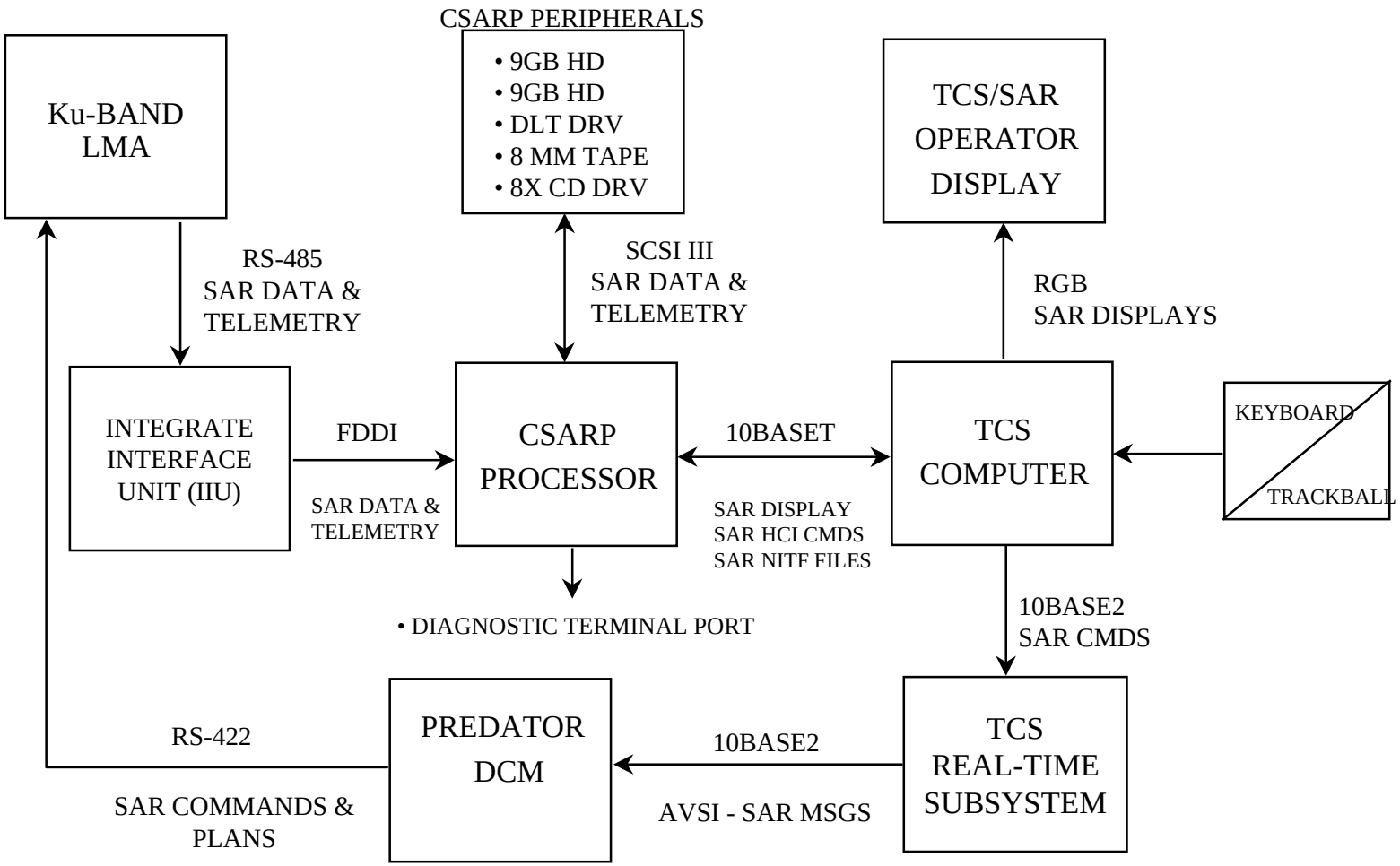

CSARP DIAGRAM

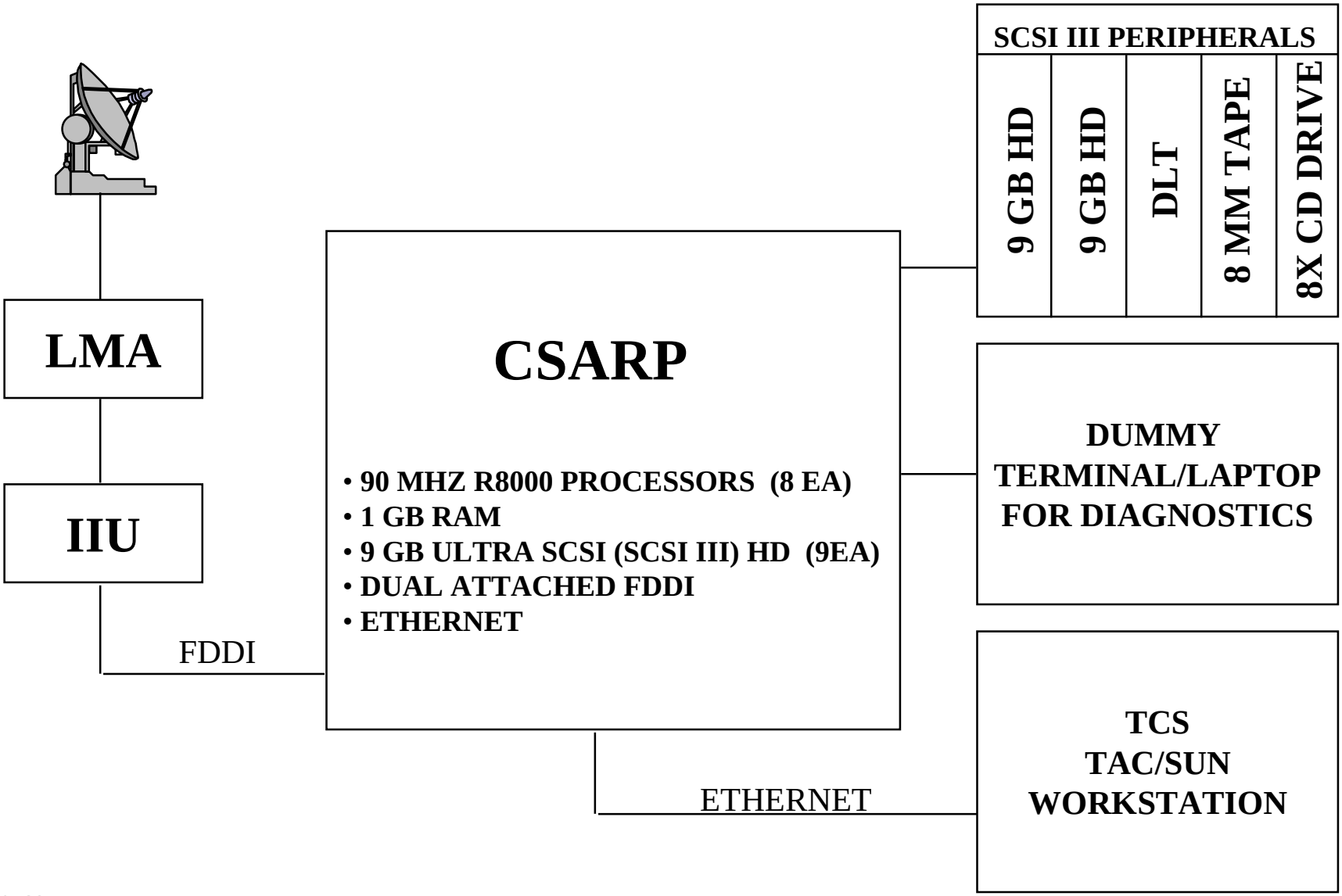

AUTOMATED LAUNCH & RECOVERY SUBSYSTEM

(TCS BLOCK 1 RQMT)

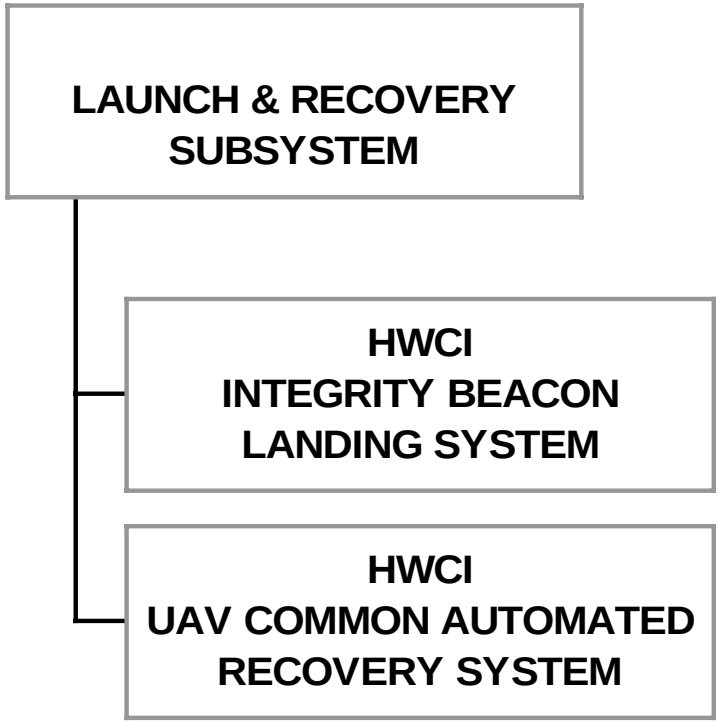

AUTOMATED LAUNCH & RECOVERY SUBSYSTEM

- PROVIDES CAPABILITY FOR AUTOMATED LAUNCH AND RECOVERY OF AV USING IBLS OR UCARS
- IBLS WILL PROVIDE
  - TCS WITH DIFFERENTIAL GLOBAL POSITIONING SYSTEM TO ALLOW TCS TO TRACK AND CONTROL THE RECOVERY OF AVs THAT ARE IBLS CAPABLE
  - AV GUIDANCE AND CONTROL FUNCTIONS TO THE REAL-TIME COMPUTER
- UCARS WILL PROVIDE
  - MICROWAVE Ka-BAND RADAR-BASE TRACK SYSTEM TO TRACK AND RECOVER AVs THAT ARE UCARS CAPABLE
  - AV GUIDANCE AND CONTROL FUNCTIONS TO THE REAL-TIME COMPUTER

COMMUNICATIONS SUBSYSTEM

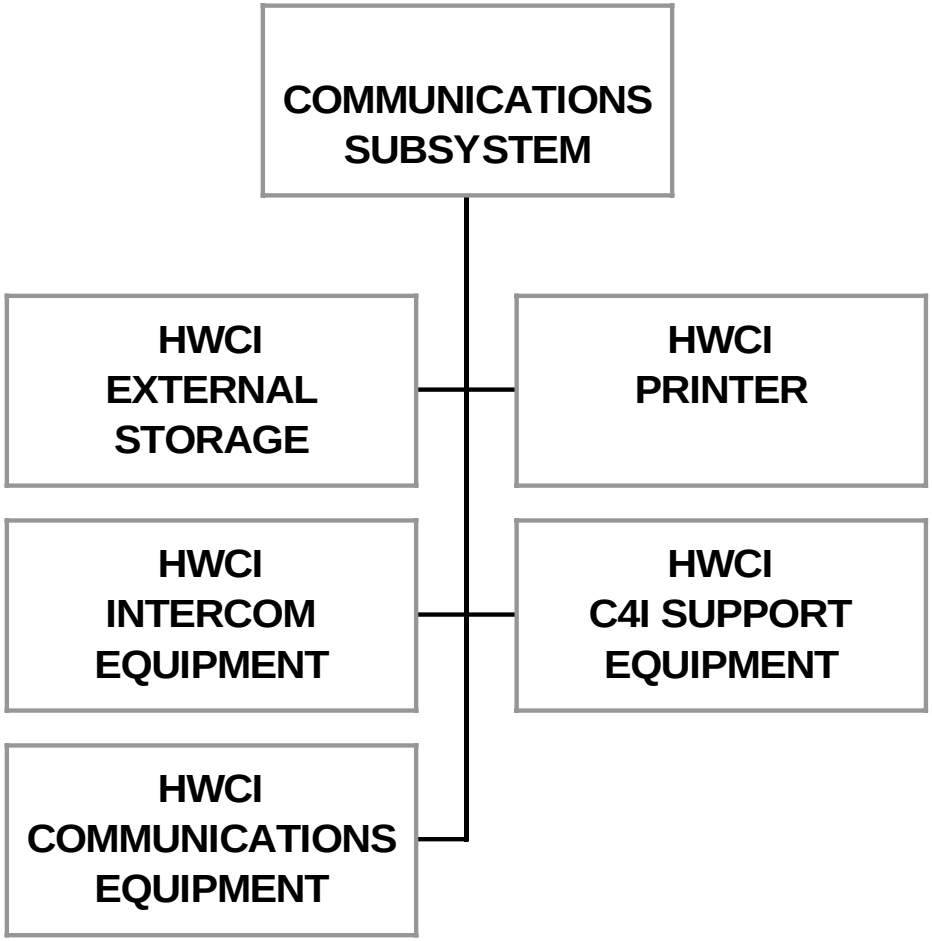

COMMUNICATIONS SUBSYSTEM

- PROVIDES INTERNAL VOICE COMMUNICATIONS BETWEEN TCS OPERATORS AND TCS MISSION COMMANDER
- IN TCS-LS / TOC CONFIGURATIONS THE COMMUNICATIONS SUBSYSTEM INTERFACES WITH
  - MOBILE SUBSCRIBER EQUIPMENT (MSE) / WIRE SUBSCRIBER EQUIPMENT
  - SINCGARS RADIO
- IN TCS-SB CONFIGURATIONS THE COMMUNICATIONS SUBSYSTEM INTERFACES WITH
  - SINGLE AUDIO SYSTEM
  - INTEGRATED VOICE NETWORK (IVN) / INTEGRATED VOICE COMMUNICATIONS SYSTEM (IVCS)
- PROVIDES SELECTION OF COMM INTERFACE CKT, SELECTION OF HEADSET LEFT/RIGHT CKT OUTPUT, LEFT/RIGHT VOLUME CONTROL, MIC VOLUME, PUSH-TO-TALK (PTT) AND VOICE ACTIVATED MICROPHONE (VOX).

COMMUNICATIONS SUBSYSTEM NOTIONAL

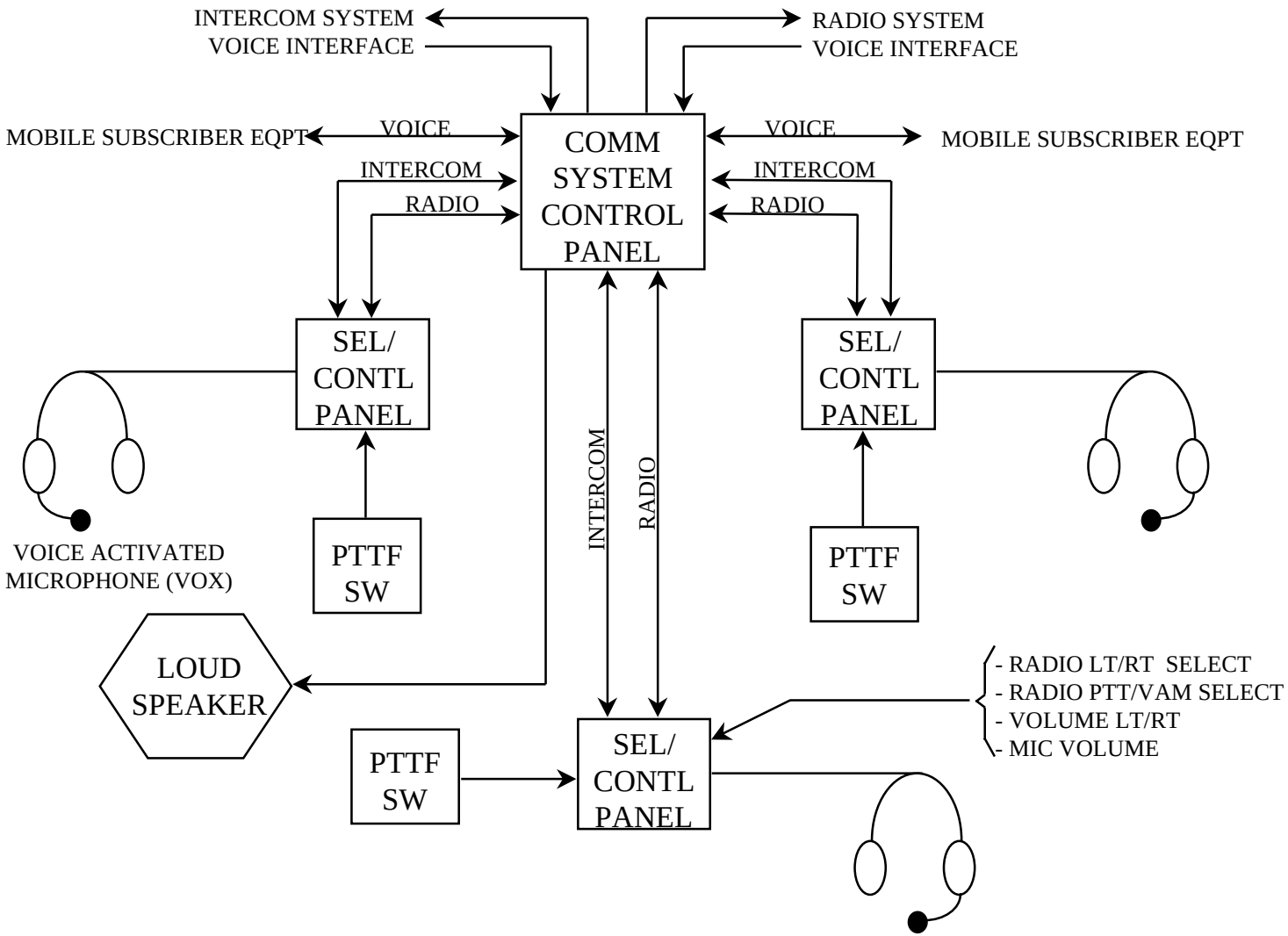

POWER DISTRIBUTION SUBSYSTEM

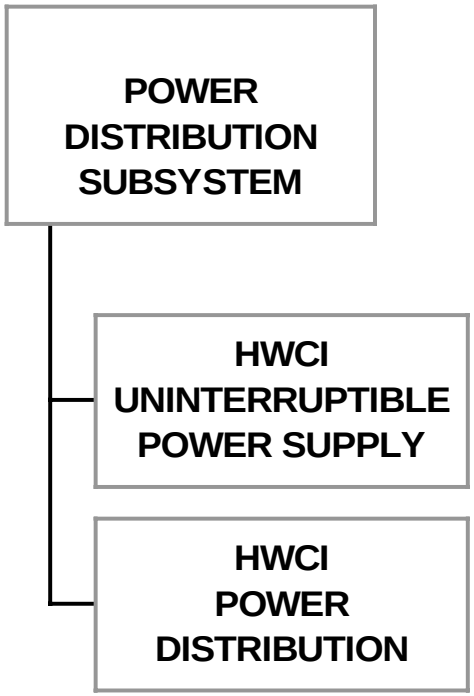

POWER DISTRIBUTION SUBSYSTEM

- POWER DISTRIBUTION SUBSYSTEM PROVIDES CONTROL, CONDITIONING AND DISTRIBUTION OF INPUT POWER TO THE SYSTEM
- PROVIDES INPUT OVERLOAD PROTECTION, INPUT SPIKE SUPPRESSION, POWER STABILIZATION, MAIN CIRCUIT BREAKER/POWER CONTACTOR CONTROL, VOLTAGE STEP-DOWN, EMI FILTERING
- POWER DISTRIBUTION TO TO THE VARIOUS COMPONENTS OF TCS VIA CIRCUIT BREAKERS
- UNINTERRUPTIBLE POWER SUPPLIES TO PROVIDE BACKUP POWER TO AVOID LOSS OF AV CONTROL OR OTHER CRITICAL FUNCTIONS DURING PRIMARY POWER OUTAGES

POWER DISTRIBUTION SUBSYSTEM (NOTIONAL)

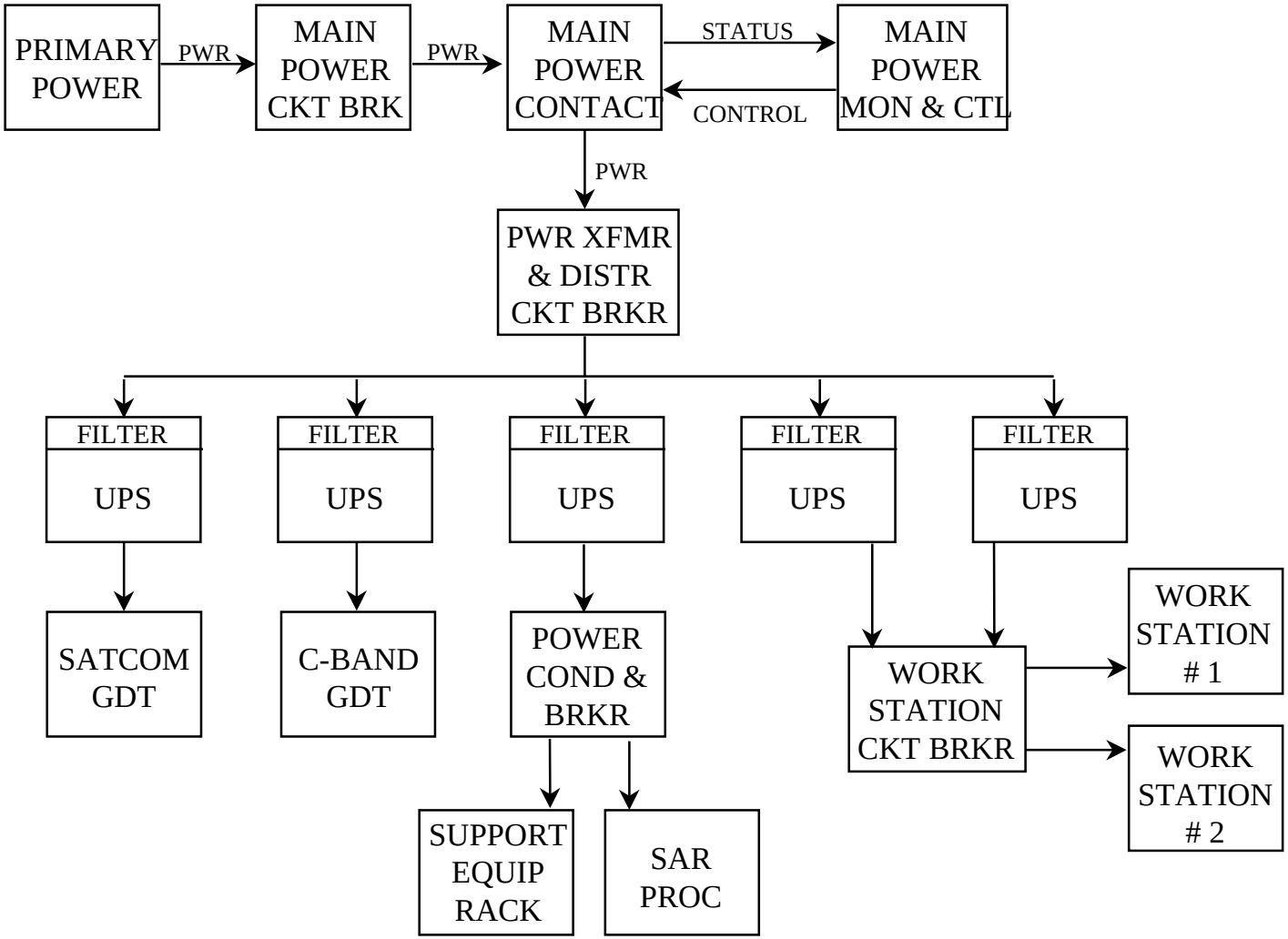

FIELDABLE PROTOTYPES

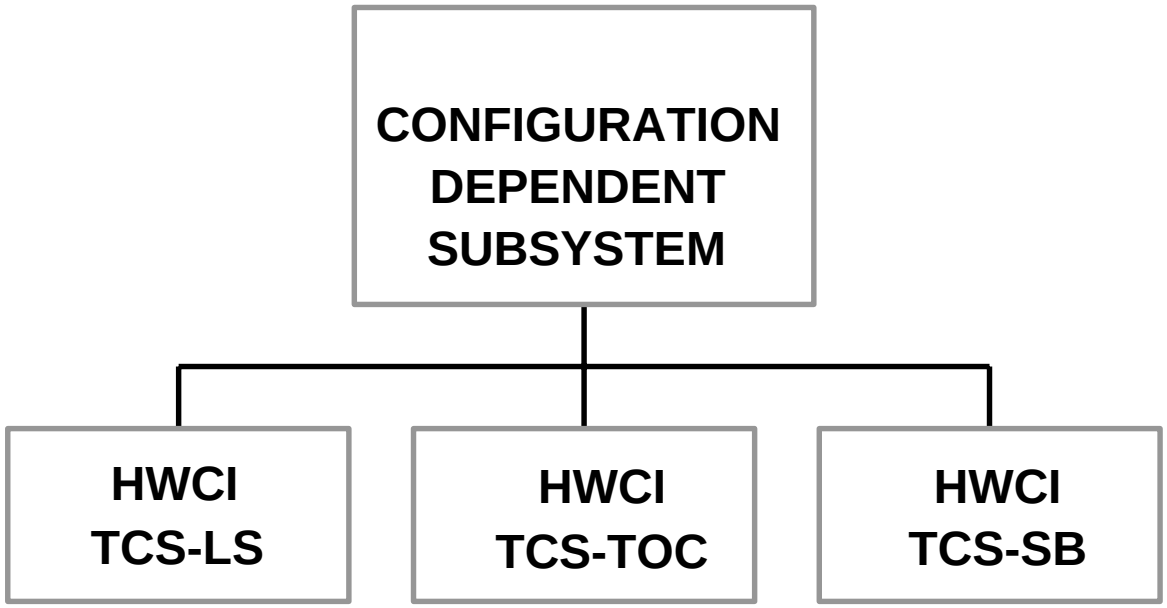

TOC CONFIGURATION

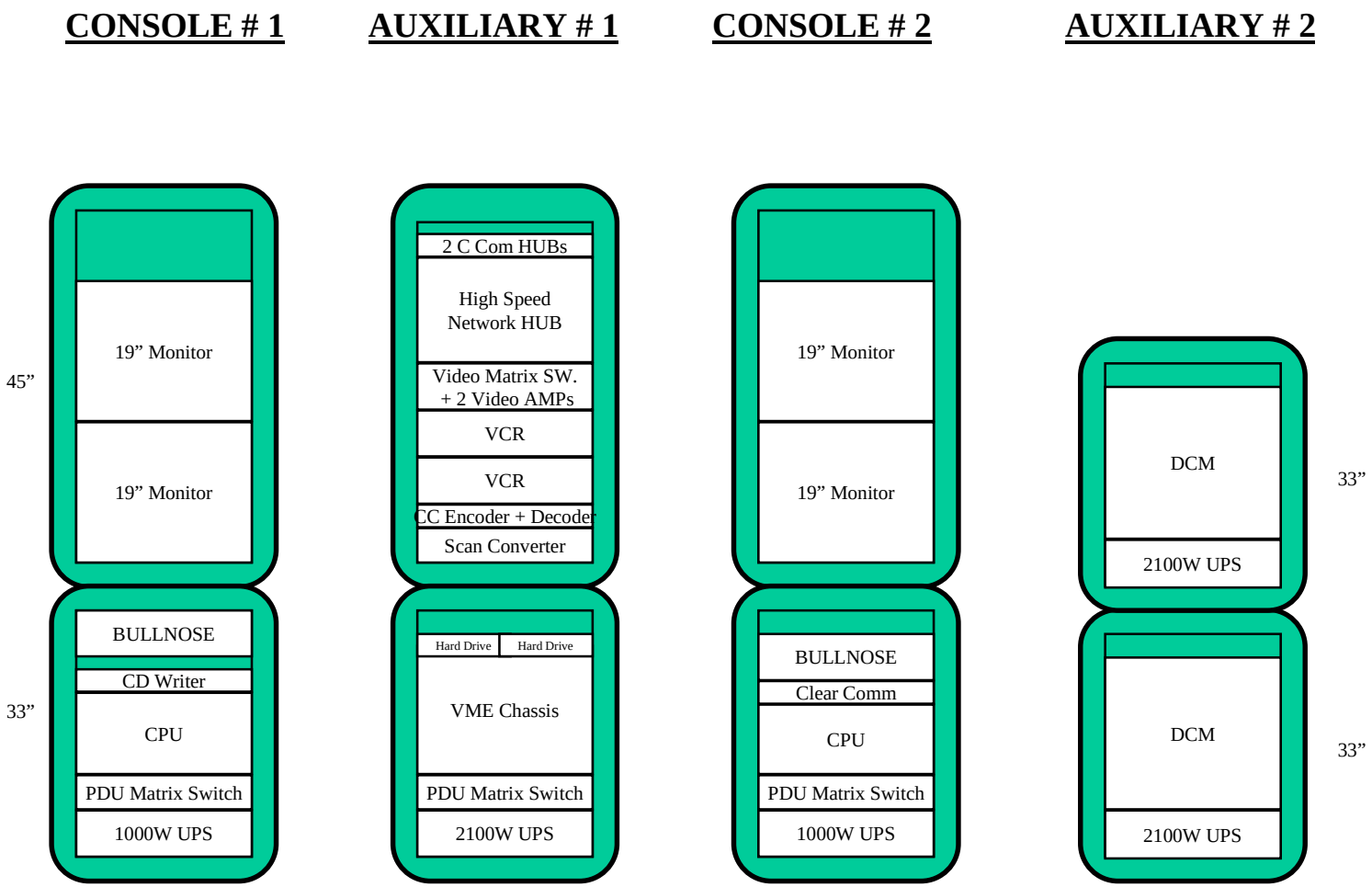

TOC CONFIGURATION

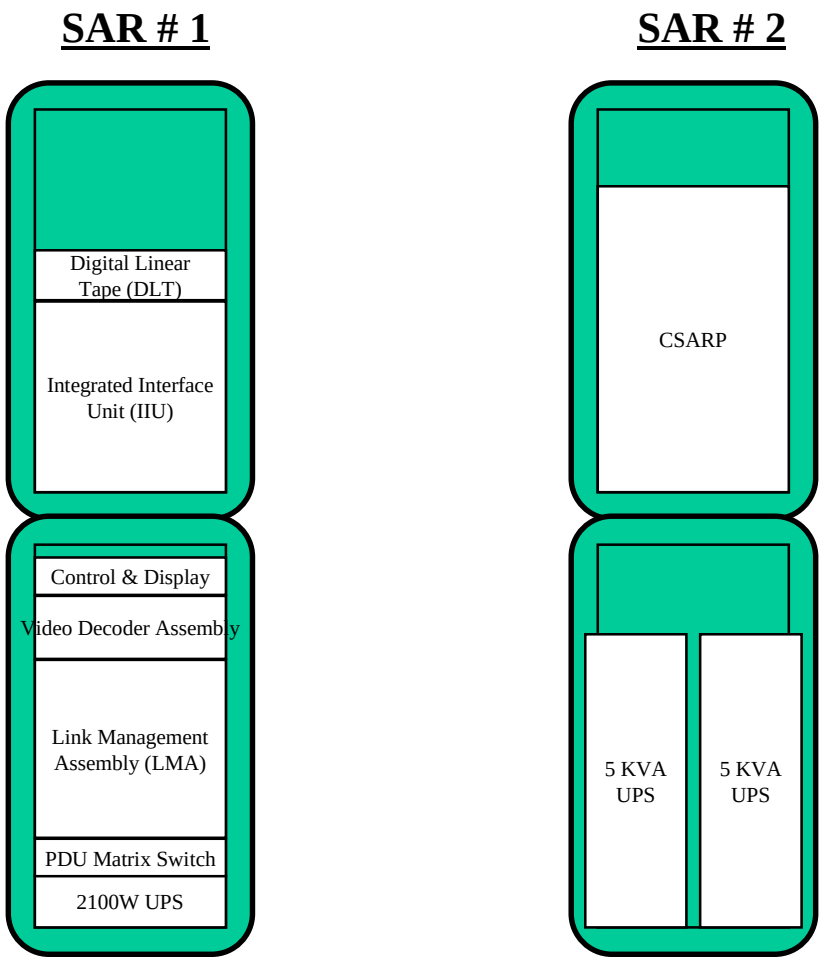

DATA TERMINAL (DT) IN TOC

TOC CONFIGURATION

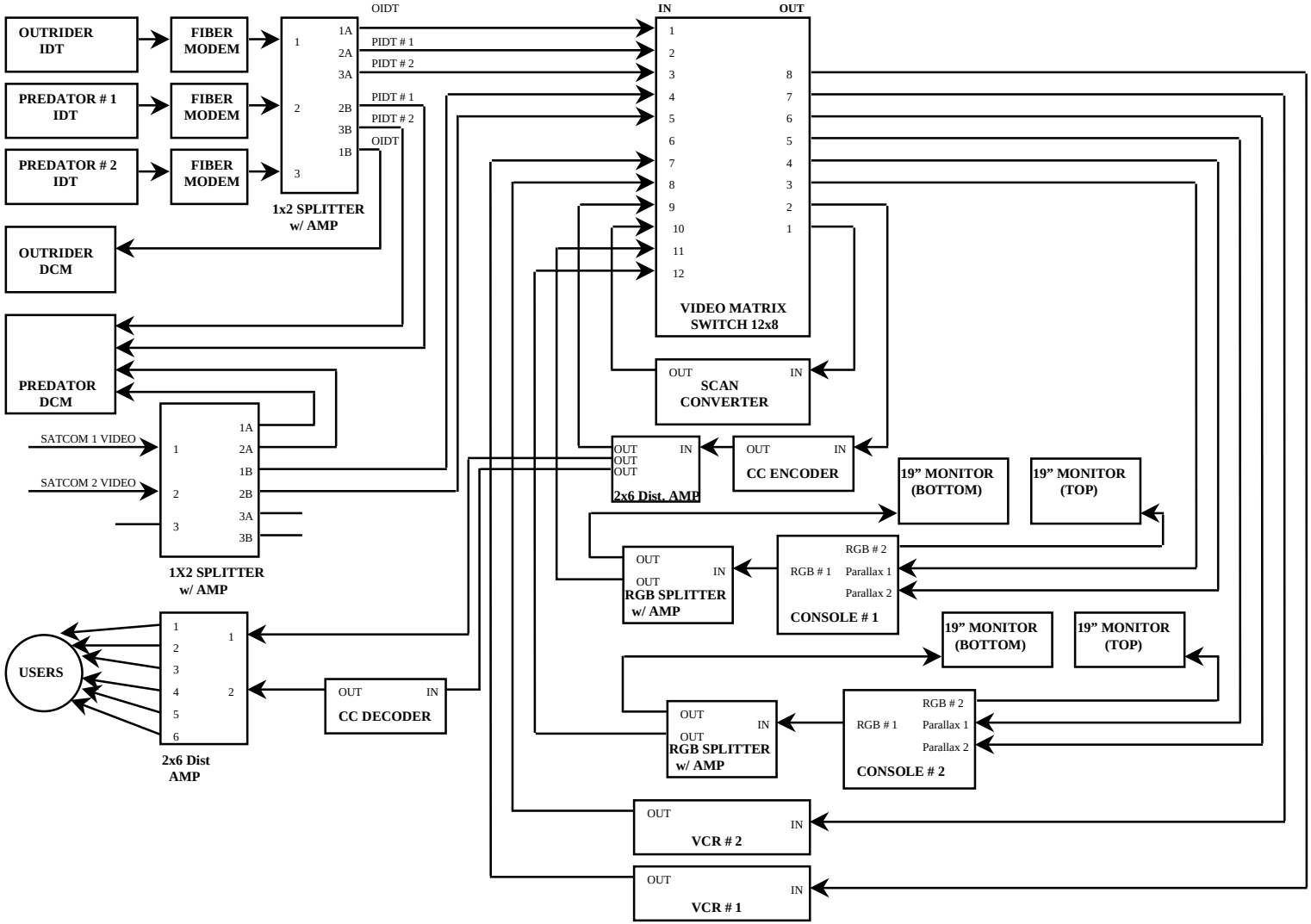

VIDEO CONNECTION FOR TOC

TOC CONFIGURATION

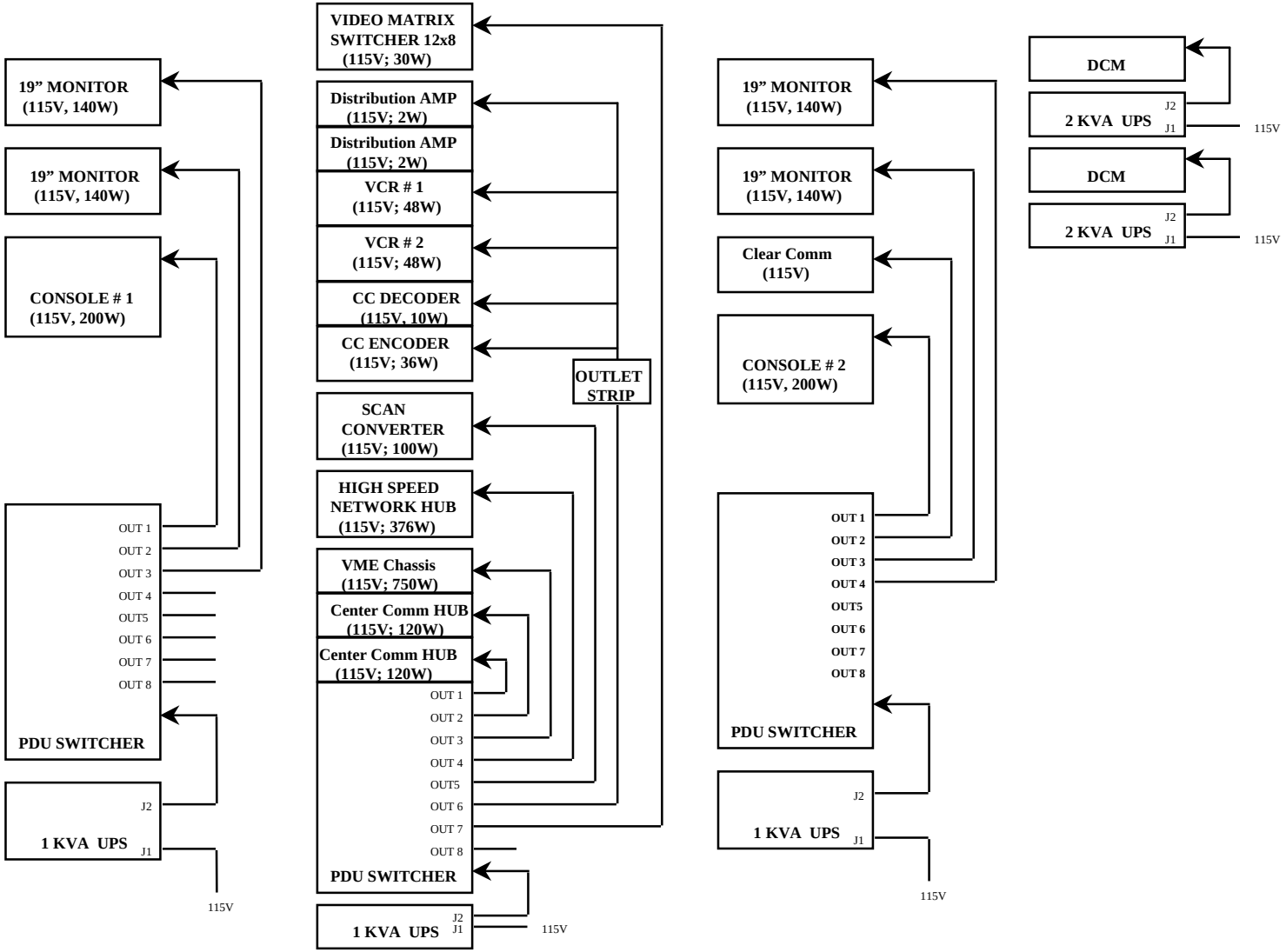

POWER CONNECTION FOR TOC

TOC CONFIGURATION

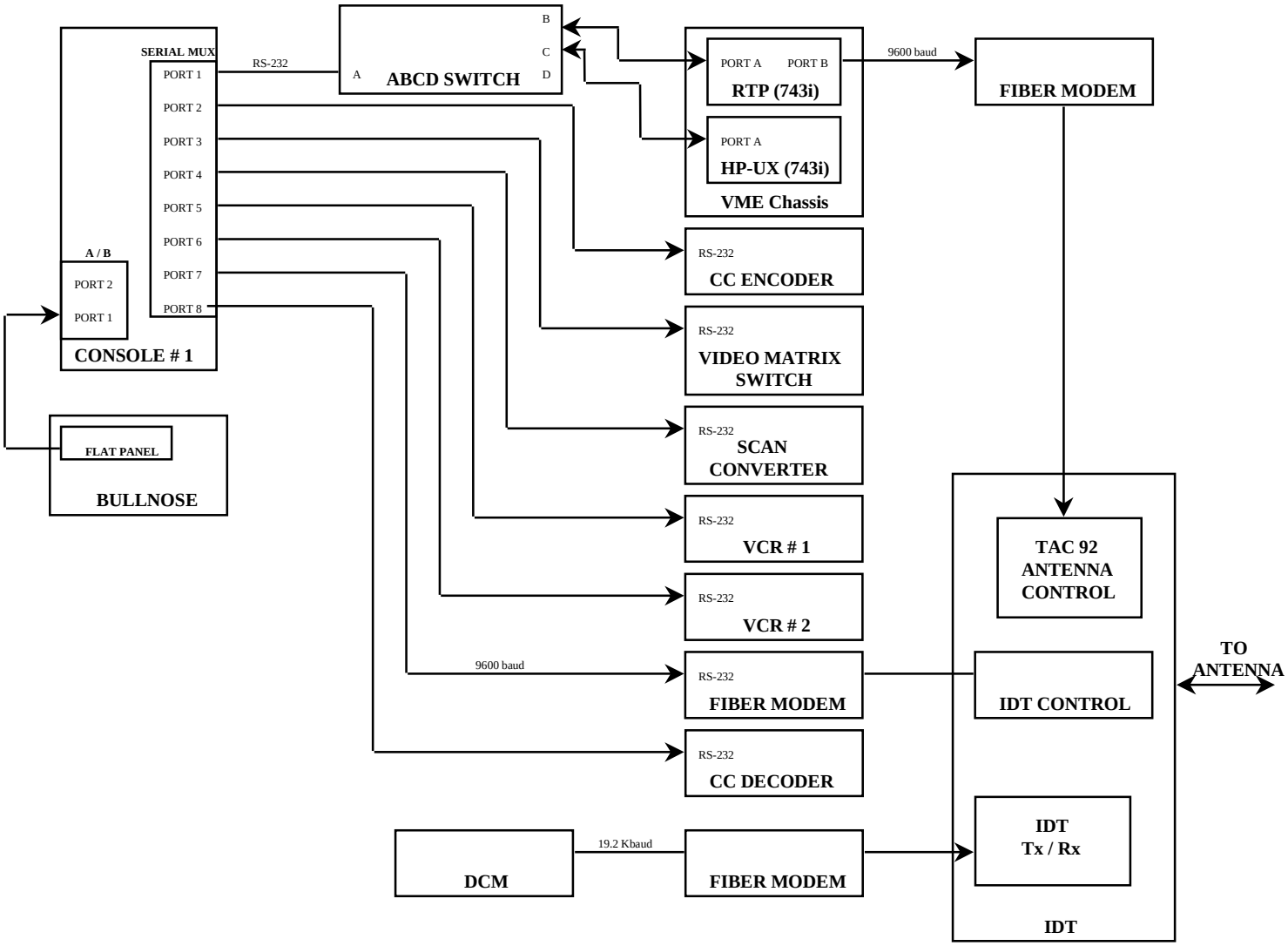

TCS PDR Ver 1
23-Nov-97

SERIAL CONNECTION FOR TOC

TOC CONFIGURATION

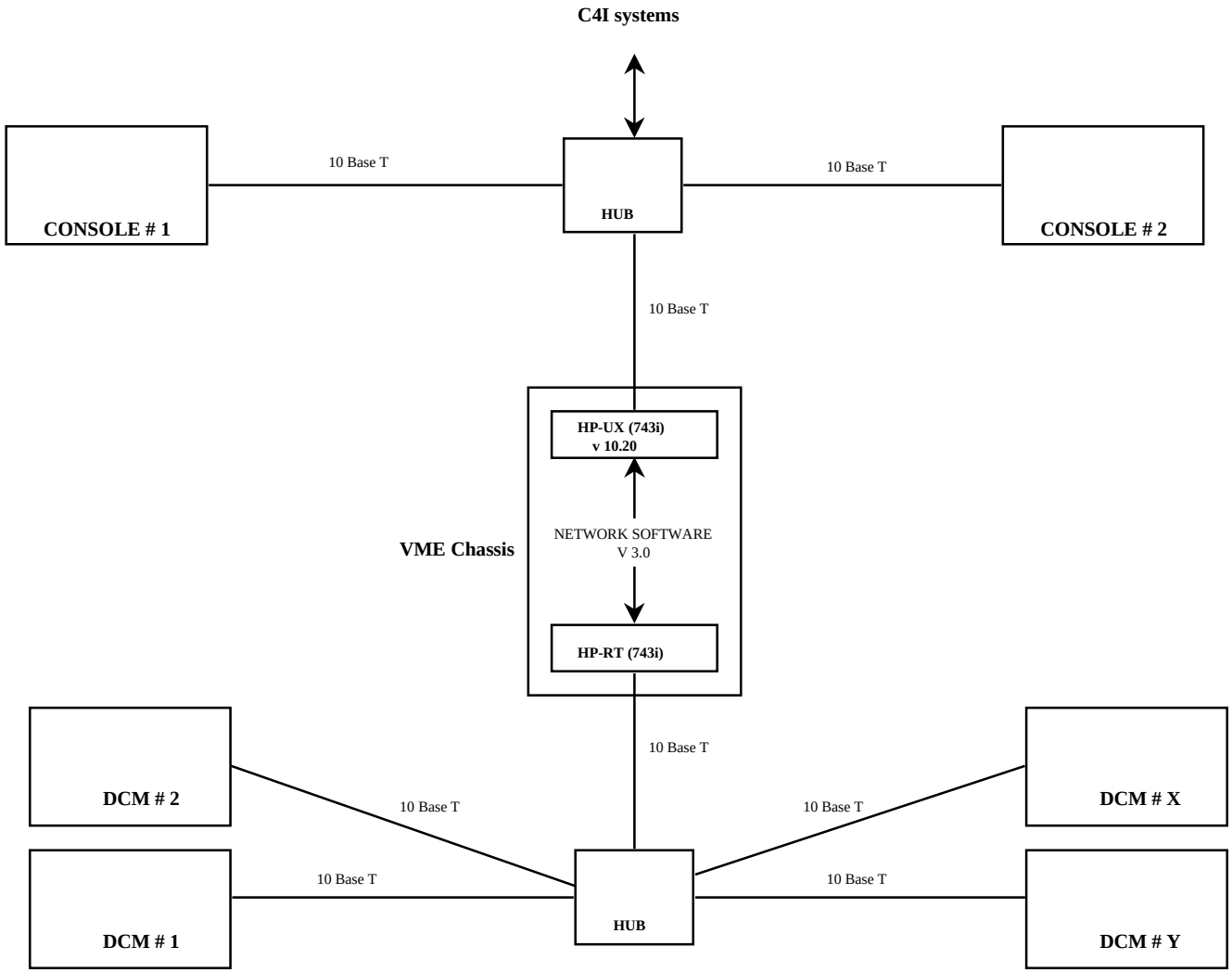

ETHERNET CONNECTION FOR TOC

HARDWARE CONFIGURATIONS

- LOS ONLY
- EO/IR
- PREDATOR & OUTRIDER

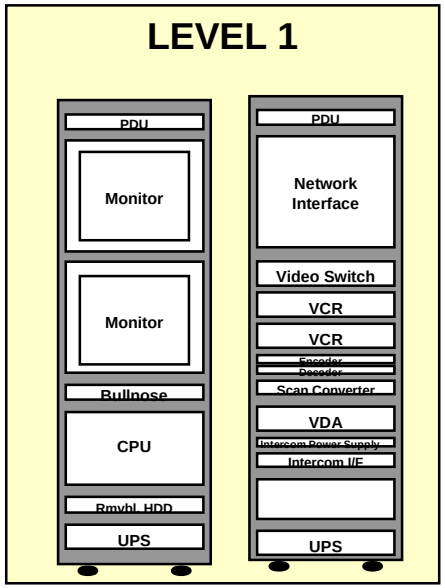

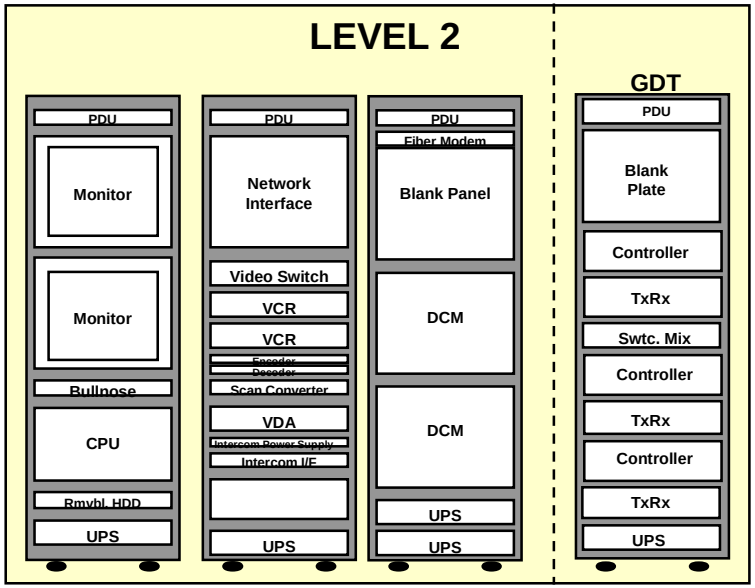

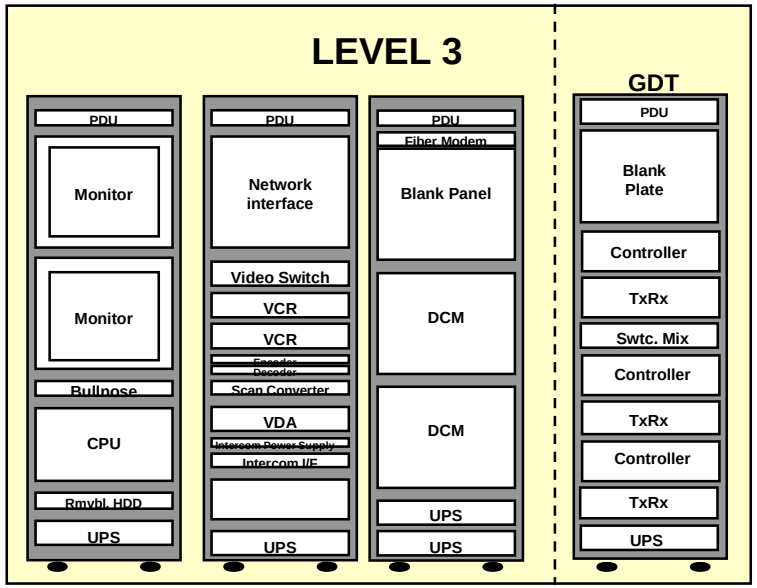

HARDWARE CONFIGURATIONS
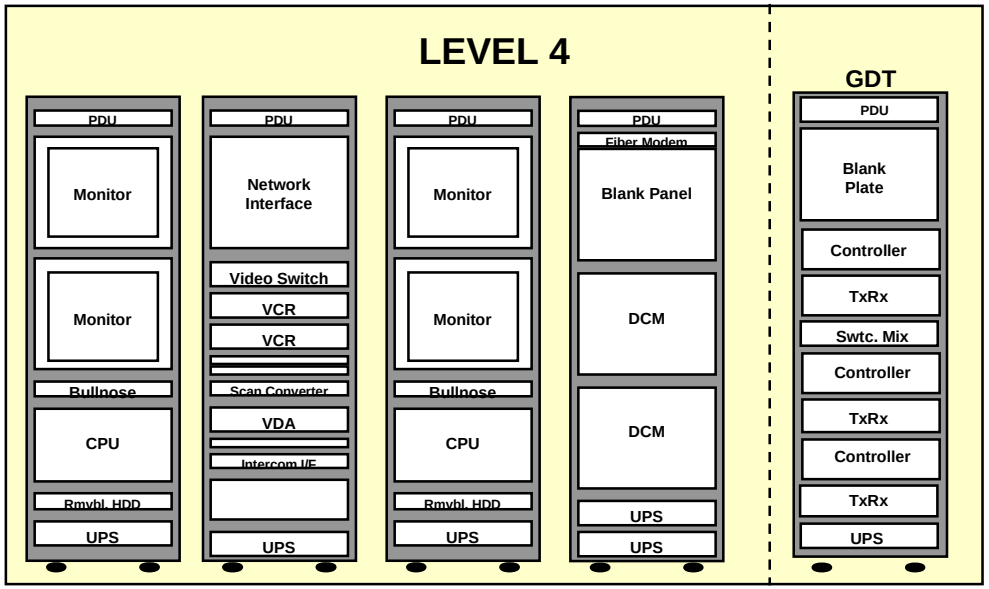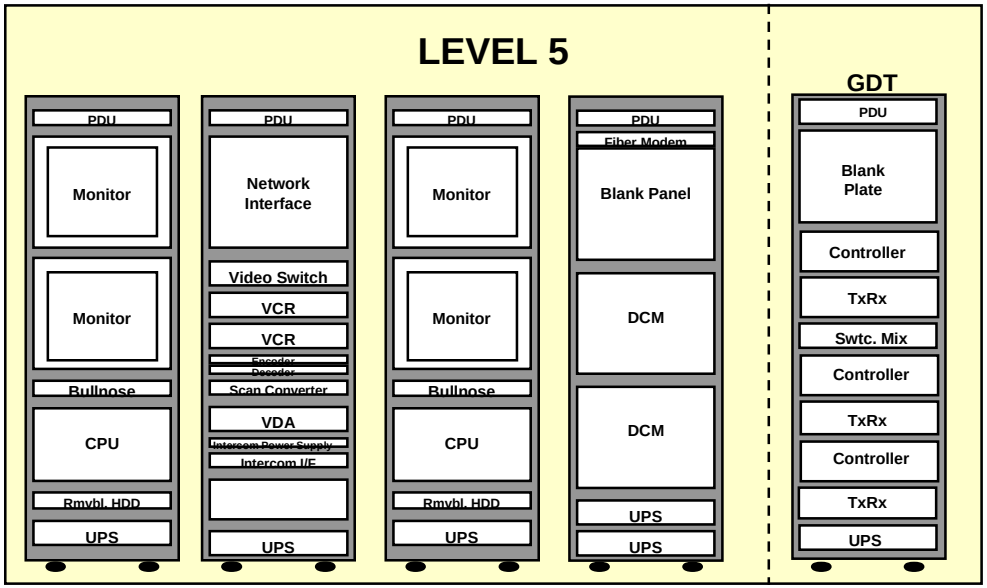
- LOS ONLY
- EO/IR
- PREDATOR & OUTRIDER