TCS High-Level Architecture

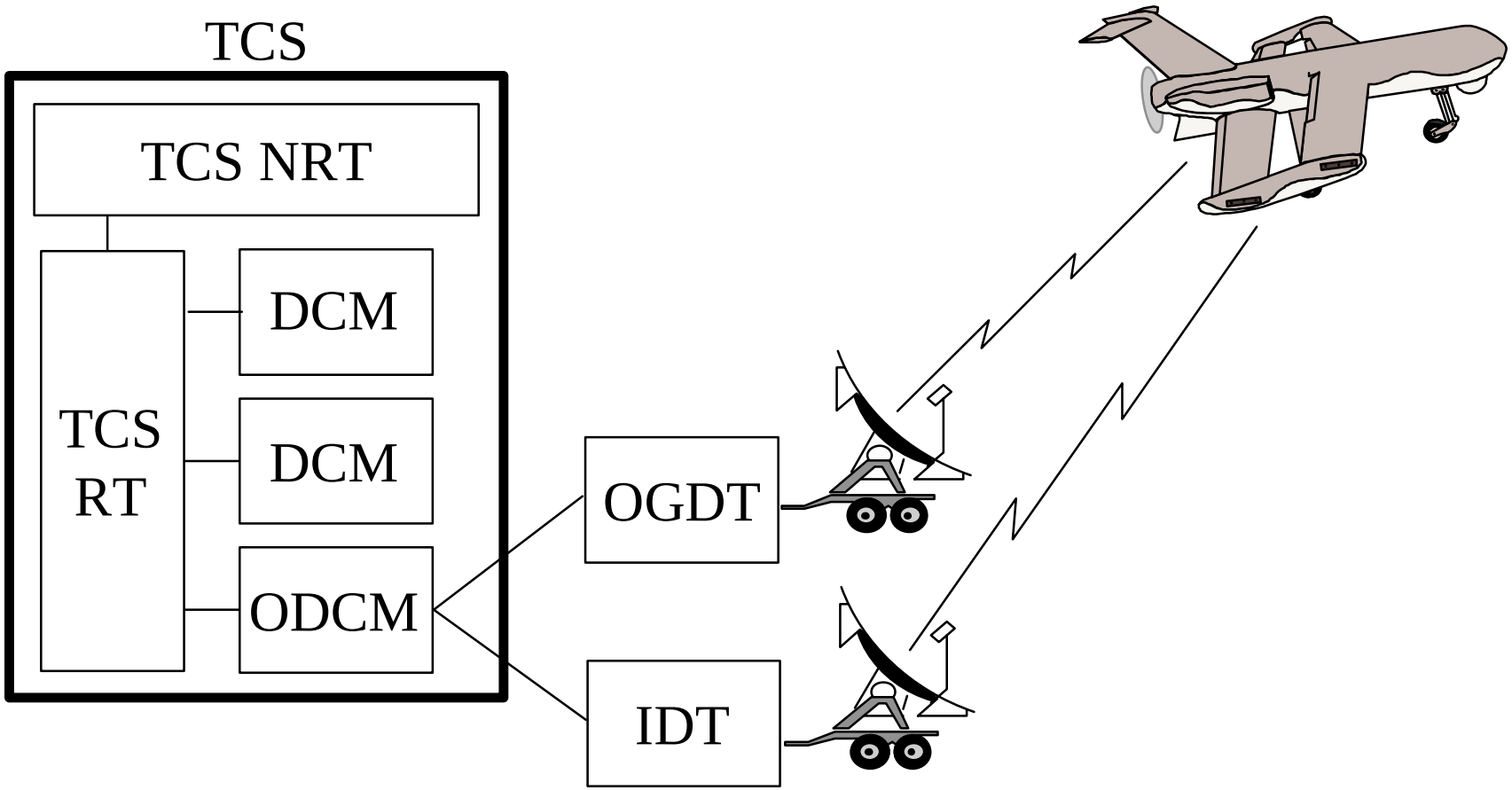

Functional Allocation

ODCM Functions

- Block 0 AVSI
- Data Link Interpreter (Proven Outrider I/F)
- Data Recording/Playback Capability
- AV Simulator (Test Driver)

TCS RT Complementary Functions

- Data Link I/F
    - C-Band
- Antenna Control
- RT AV Control
- RT Payload Control

ODCM Software Configuration Version 1.0 (TAC-3)

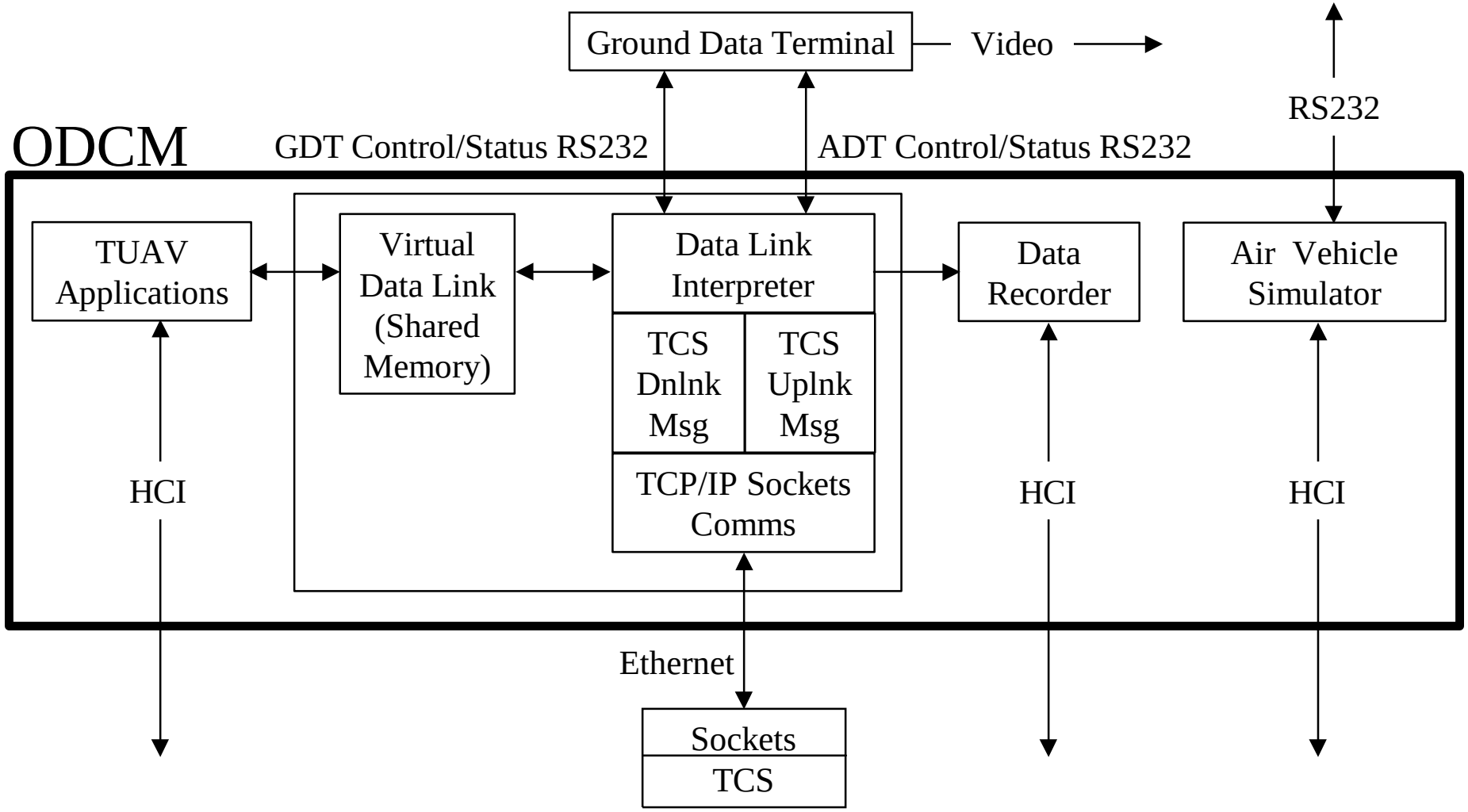

ODCM Software Configuration Version 2.0 (VME)

ODCM

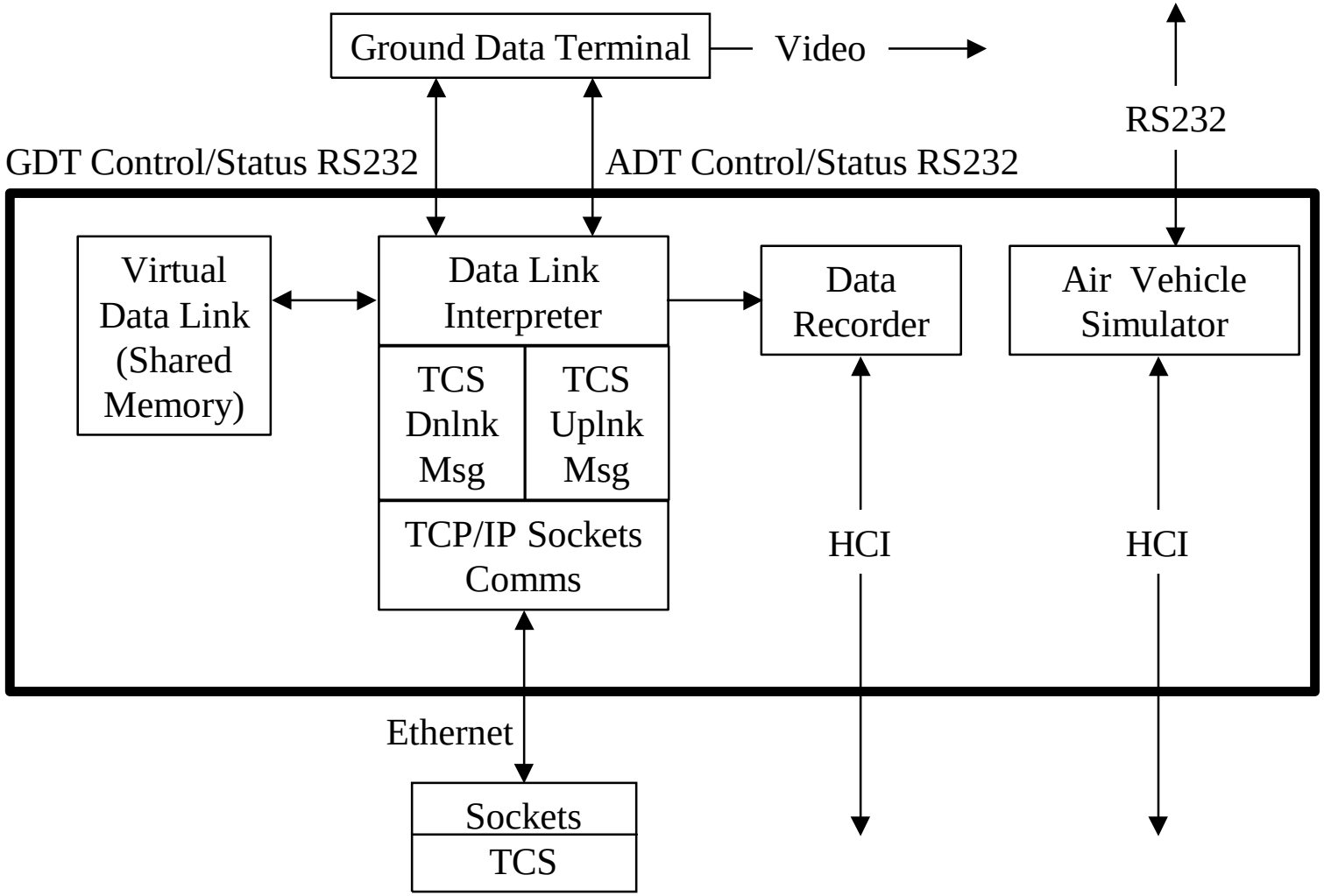

ODCM Architecture

- Uses existing Data Link Interpreter which is a proven interface with Outrider AV.
- 3 Classes developed to accomplish the TCS/ODCM interface:
  - Downlink Message Class - Processes Outrider downlink into TCS format.
  - Uplink Message Class - processes TCS uplink into Outrider specific uplink.
  - TCP/IP Sockets Communications Class - performs TCP/IP data transfer.
- Simulator with full control and simulation of vehicle and payload parameters has been developed for aid in testing and demonstration.
- Outrider Data Recorder and Player has been modified to be compatible with TCS for recording and playback of live data which can be used for testing and demonstration.
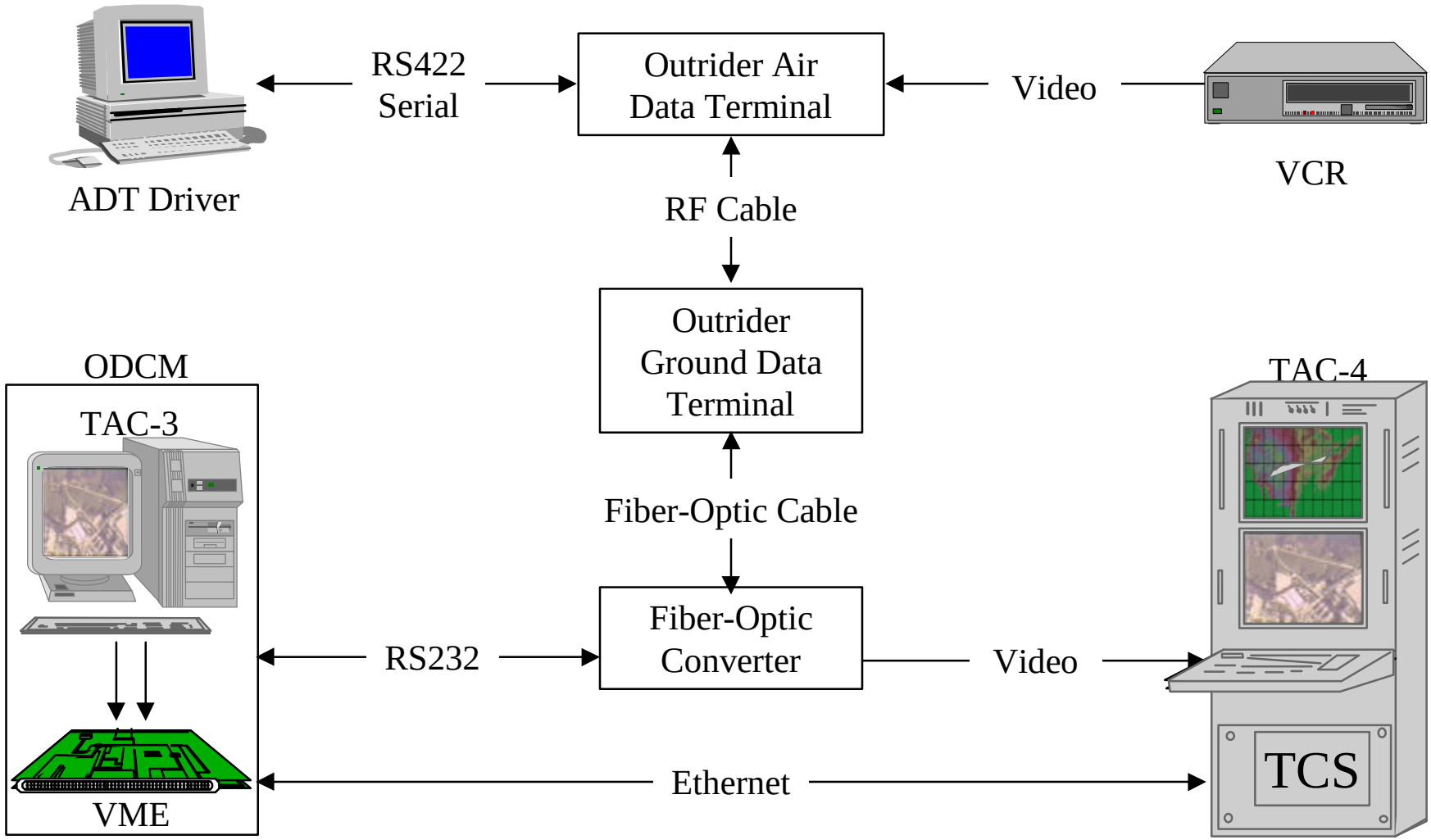
ODCM TCS Integration Configuration