SYSTEM INTEGRATION CONTRACT PLAN, SCOPE, AND PHILOSOPHY

LISA COLUZZI

AGENDA

1300	WELCOME	CAPT WITTE
1310	SYSTEM INTEGRATION CONTRACT	CONTRACTS
1320	TCS PROGRAM	CAPT WITTE
1415	SYSTEM INTEGRATION CONTRACT PLAN, SCOPE, AND PHILOSOPHY	LISA COLUZZI STEVE DANIEL
1530	BREAK	
1600	DISCUSSION	CAPT WITTE AND STAFF

TCS SYSTEM CONFIGURATION

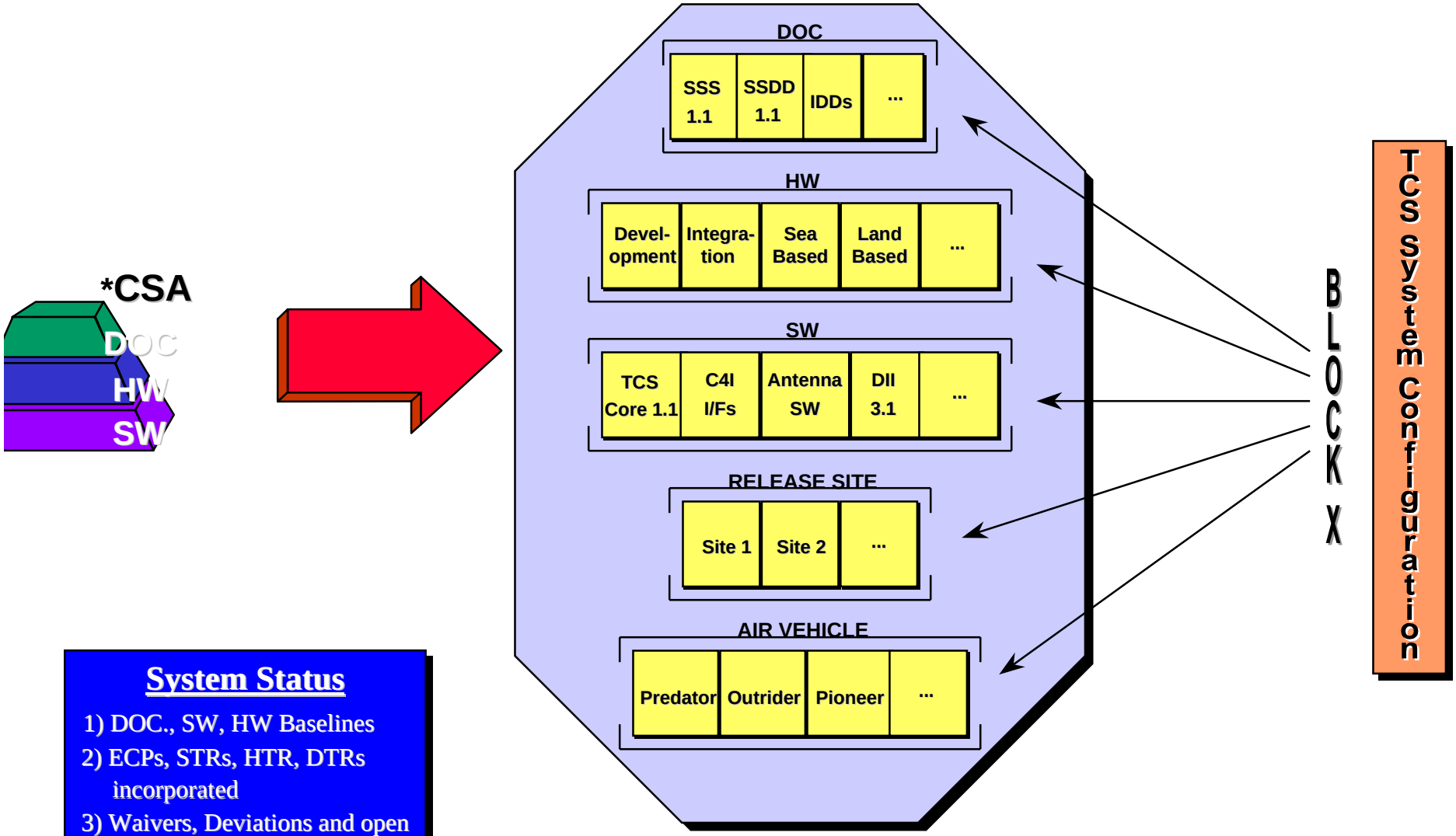

System Status

1) DOC., SW, HW Baselines
2) ECPs, STRs, HTR, DTRs incorporated
3) Waivers, Deviations and open ECPs, STRs, HTRs, & DTRs.

* CONFIGURATION STATUS ACCOUNTING

10/04/97

TCS BLOCK 0, BASELINE 1

AIR VEHICLE	FUNCTIONALITY	TCS BASELINE	C4I INTERFACES
PREDATOR OUTRIDER	PASSIVE RECEIPT/LISTENING	ENG BUILD 1	JMCIS CCTV ASAS JSIPS-N AFATDS IAS JDISS TROJAN SPIRIT II TEG ETRAC
	WAYPOINT CONTROL	ENG BUILD 2	
	PAYLOAD CONTROL	ENG BUILD 3	
	MULTI-UAV CORE	ENG BUILD 4	
	LRIP BASELINE	BASELINE 1	

REQUIREMENTS PROCESS OPERATIONAL REQUIREMENTS FLOW MODEL

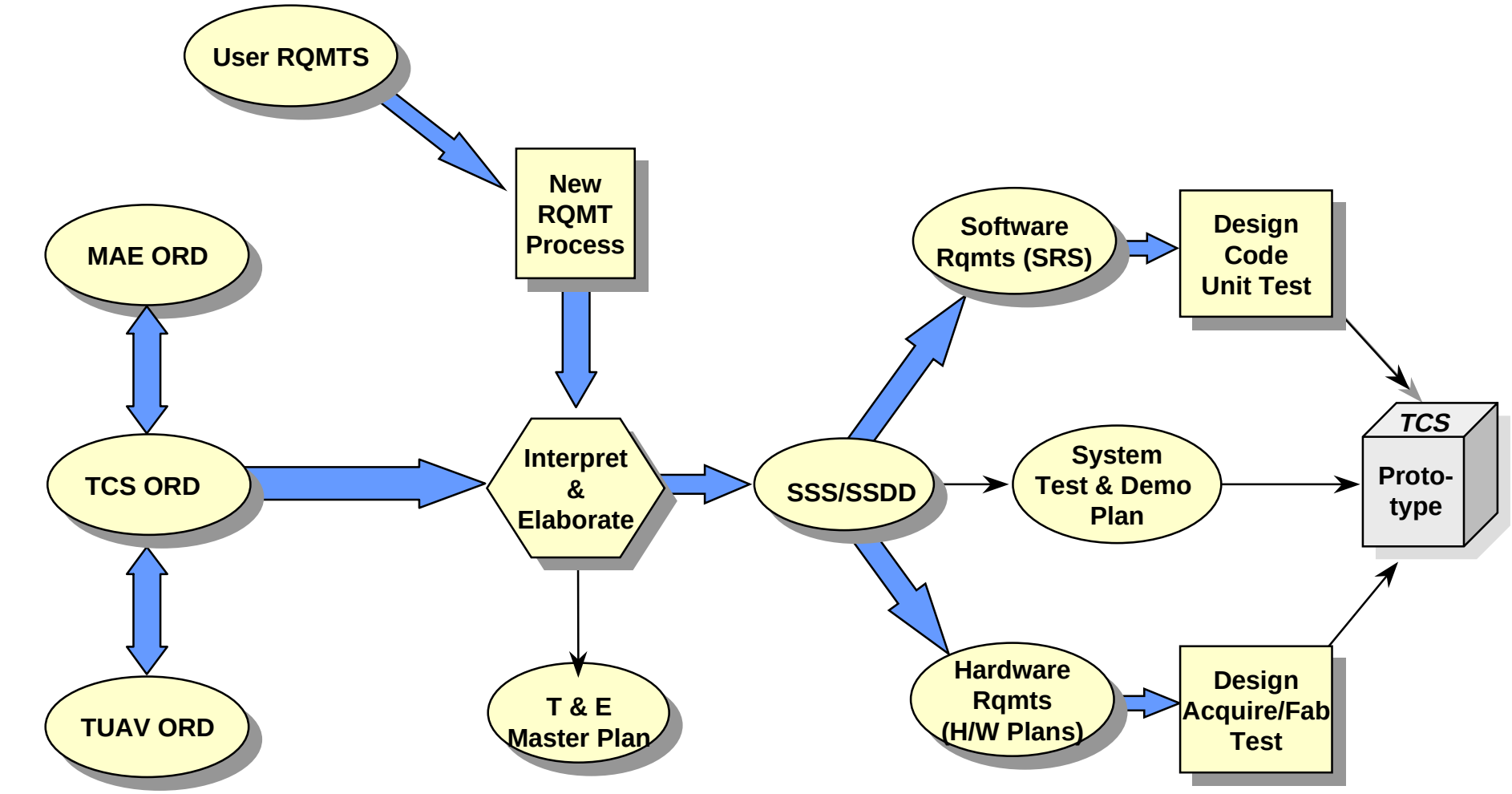

Legend:

Rqmts Documents	TCS Requirements Flow
	Other Data Flow

10/04/97

PLANNED ORD THRESHOLD REQUIREMENTS BY ENGINEERING BUILD

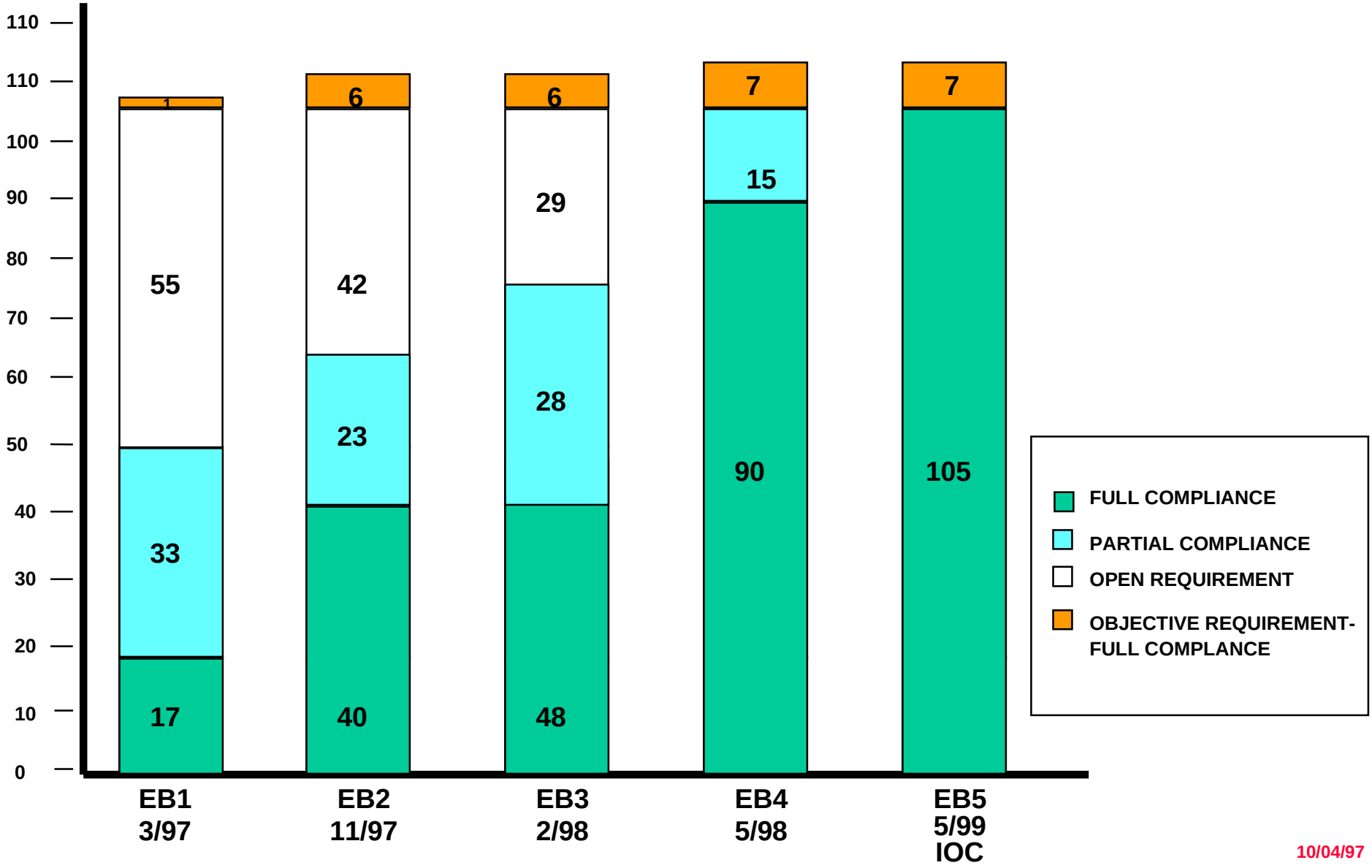

10/04/97

REQUIREMENTS DOCUMENTATION MODEL

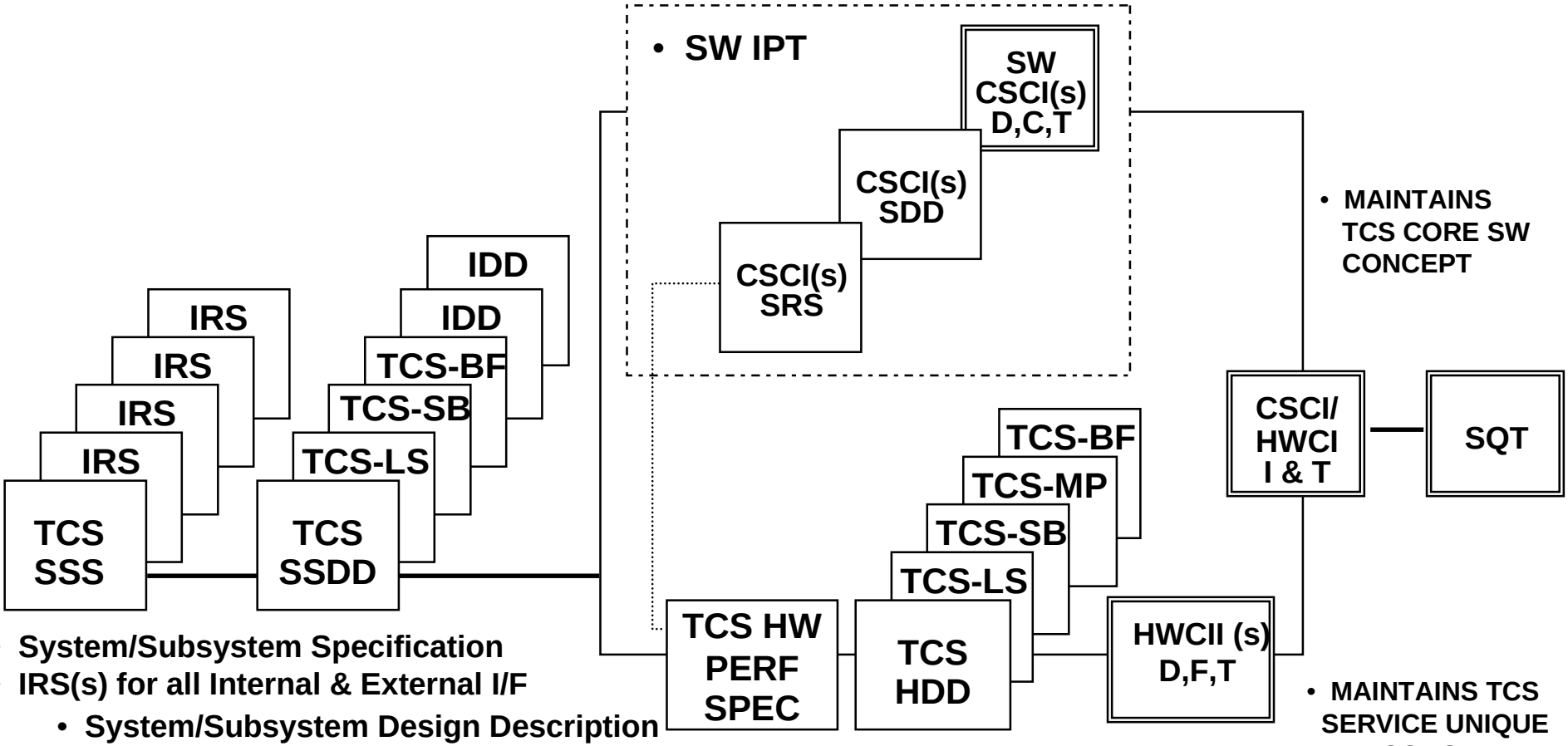

- MAINTAINS TCS CORE SW CONCEPT

- MAINTAINS TCS SERVICE UNIQUE HW CONCEPT

- System/Subsystem Specification
- IRS(s) for all Internal & External I/F
  - System/Subsystem Design Description
  - Appendices for Each TCS Type
  - IDDs for Each Interface

- TCS Hardwarre Performance Spec
- HW Specific Rqmts for COTS
- Compatibility Rqmts
- Power Budgets, etc.

- TCS Hardwarre Design Description
- Appendices for Each TCS Type

10/04/97

UAV CONTROL SYSTEM INTEROPERABILITY

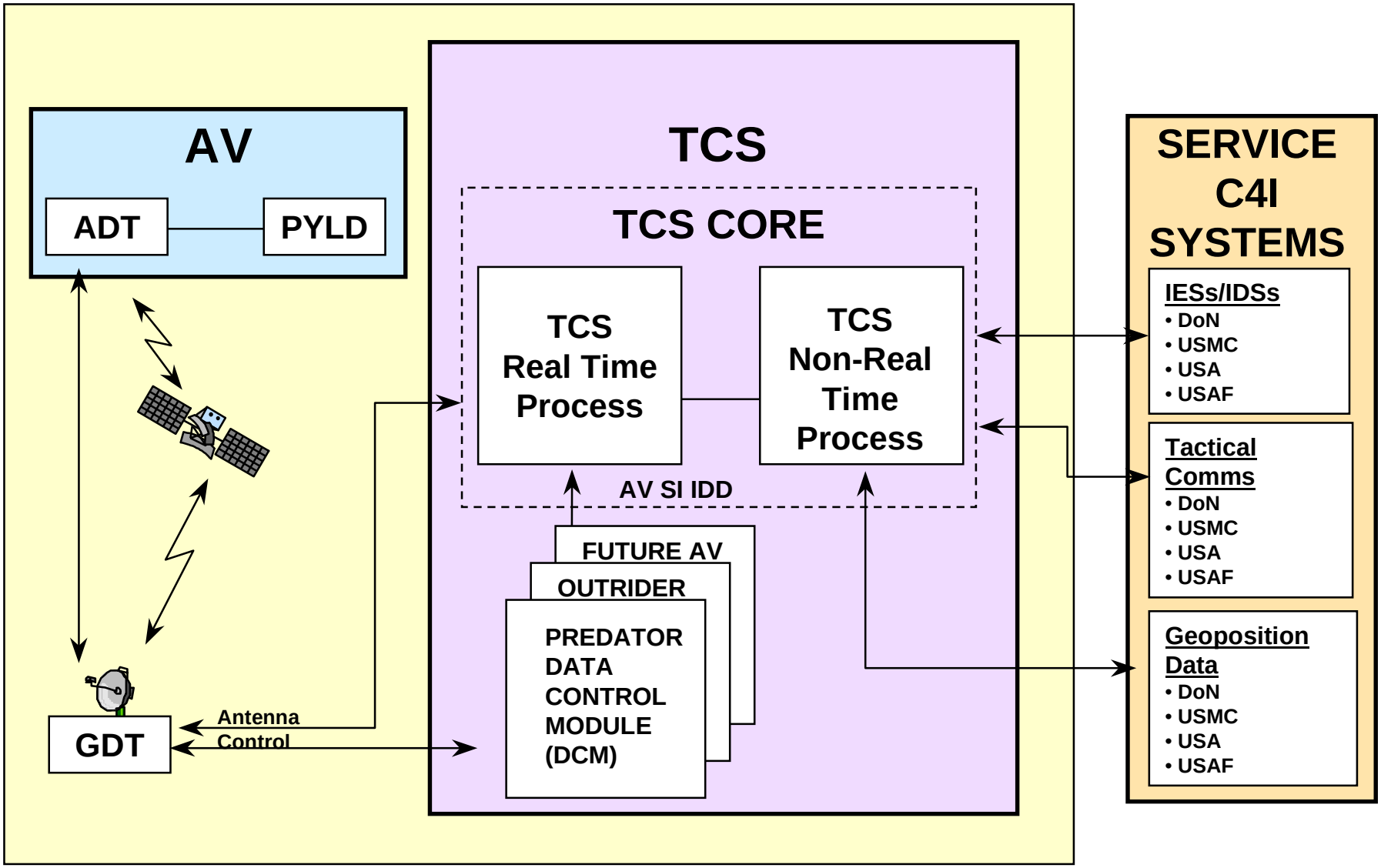

10/04/97

TCS FUNCTIONAL ARCHITECTURE

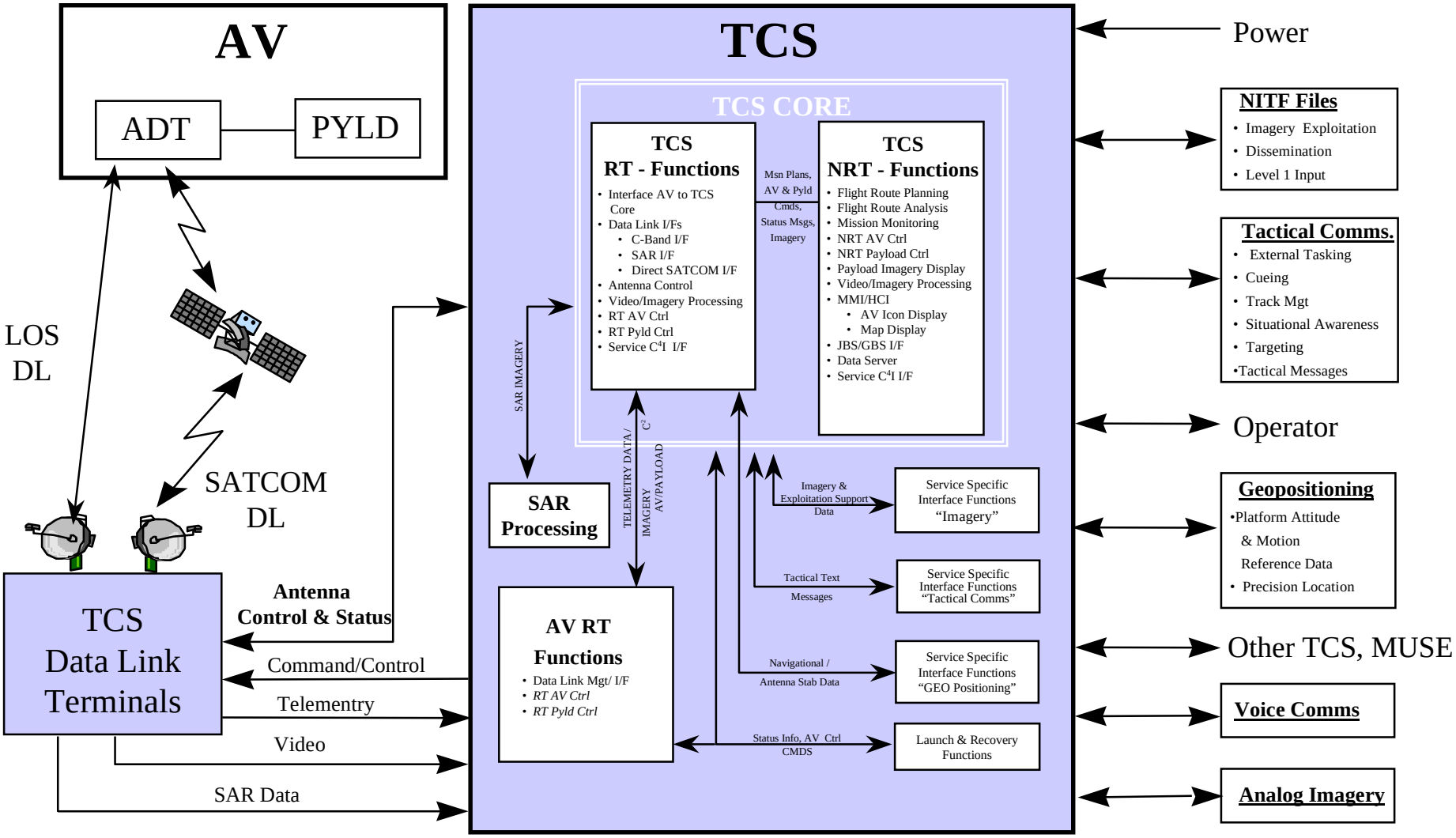

10/04/97

TCS PHYSICAL ARCHITECTURE

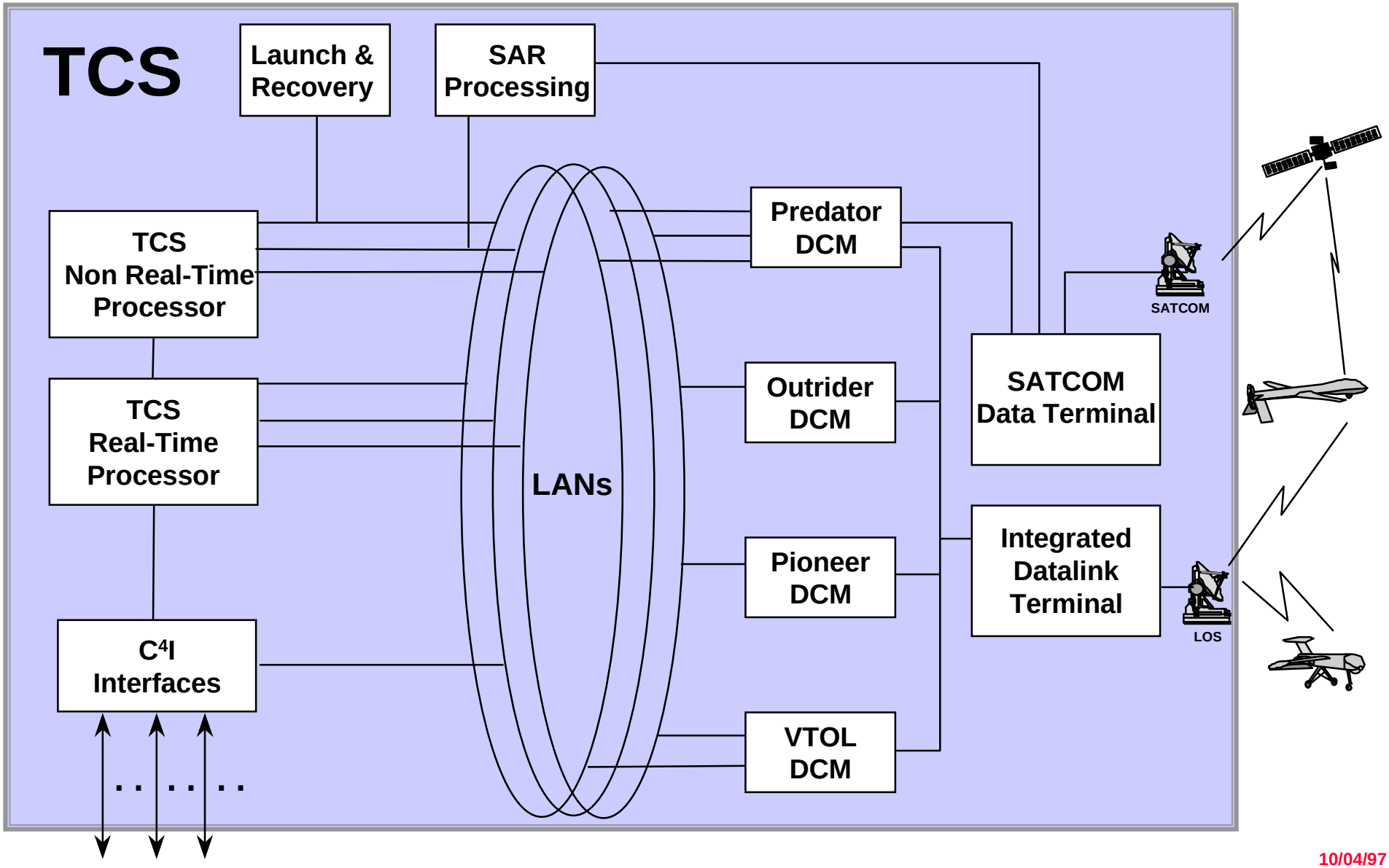

SOFTWARE ARCHITECTURE

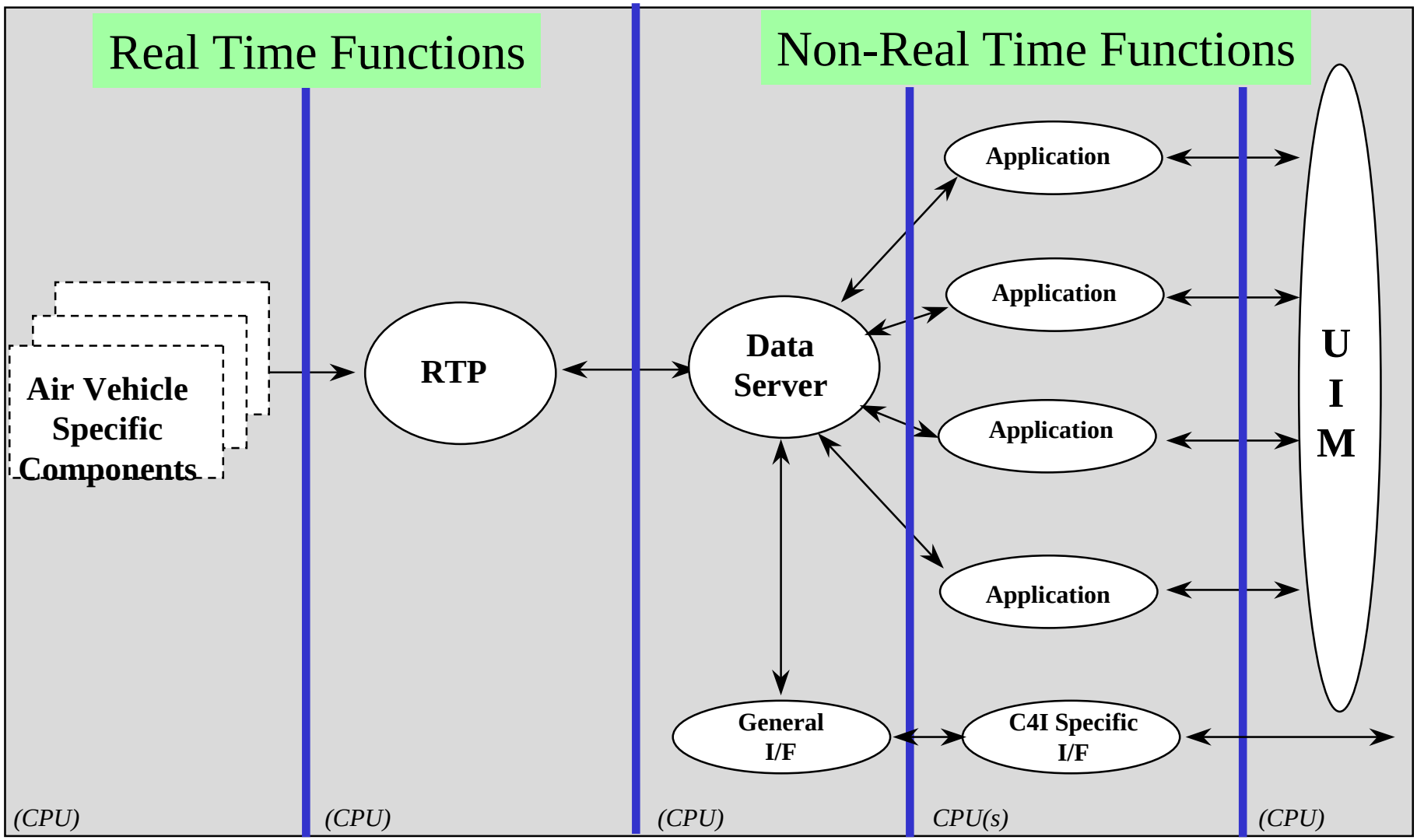

TCS SOURCE LINES OF CODE BUILD PROGRESS IN (K)

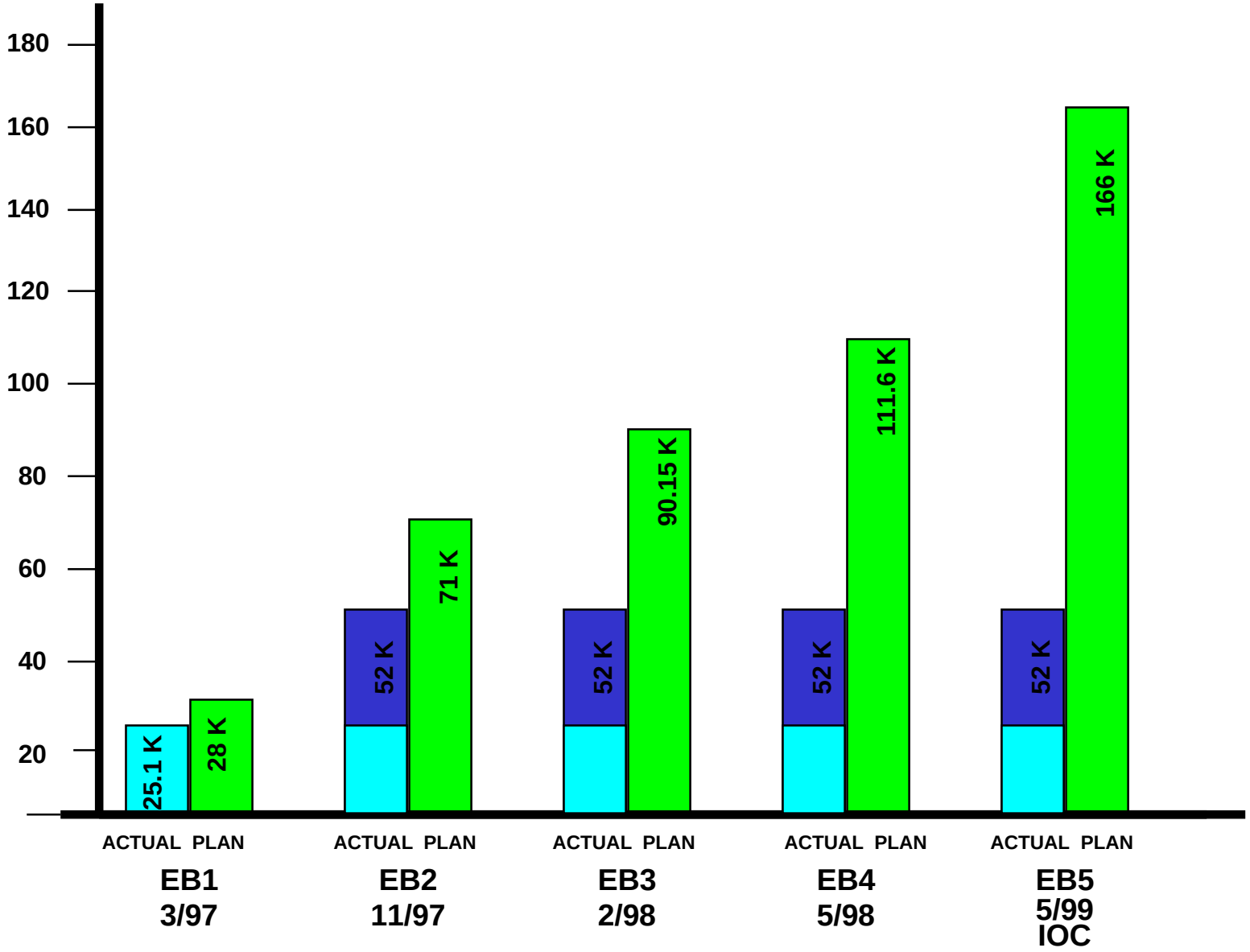

10/04/97

ENGINEERING BUILD 4 SOFTWARE SOURCE LINES OF CODE (EST)

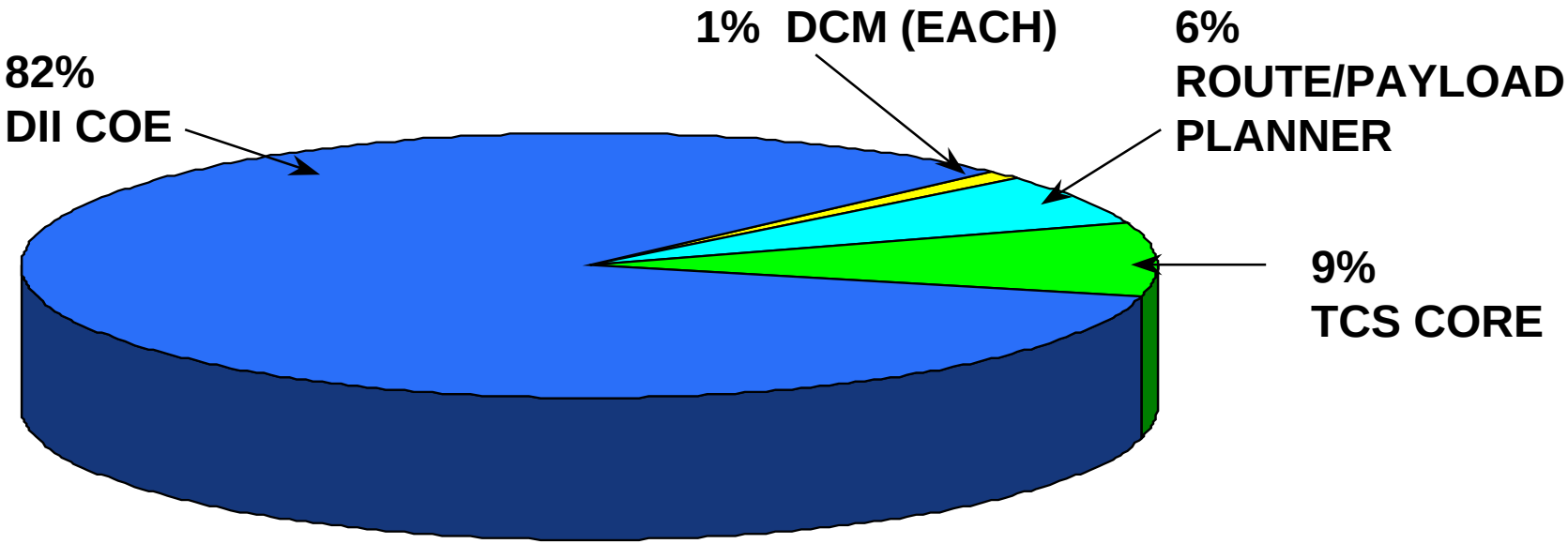

TOTAL SLOC (EST)
TCS Core - 120K
DII - 1000K +
Route/Payload - 80K
DCM (each) - 20K

TCS INTEGRATION PROCESS

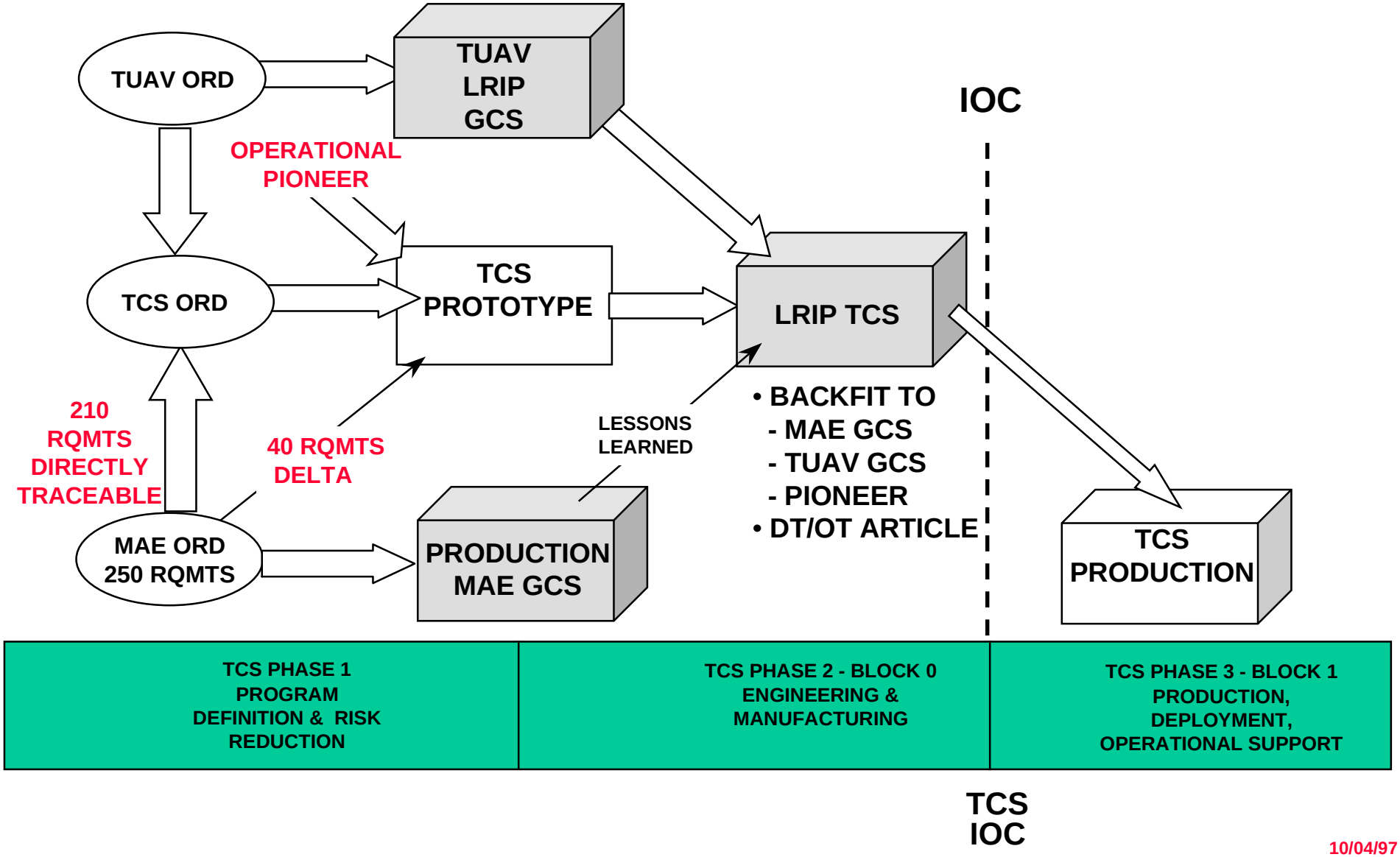

10/04/97

TCS PHASE I ACCOMPLISHMENTS

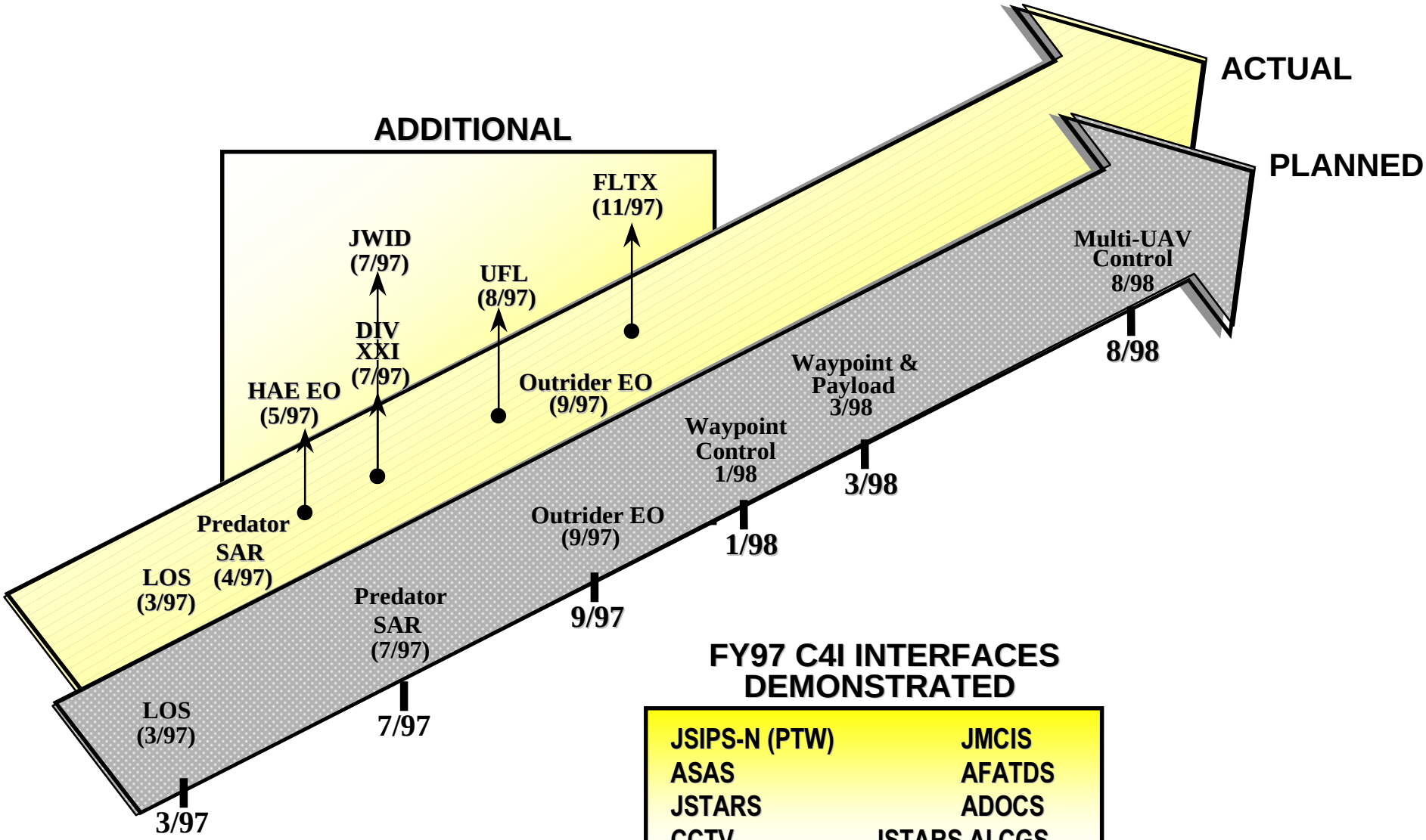

FY97 C4I INTERFACES DEMONSTRATED

JSIPS-N (PTW)	JMCIS
ASAS	AFATDS
JSTARS	ADOCS
CCTV	JSTARS AI CGS

10/04/97

TCS OUTRIDER EXAMPLE

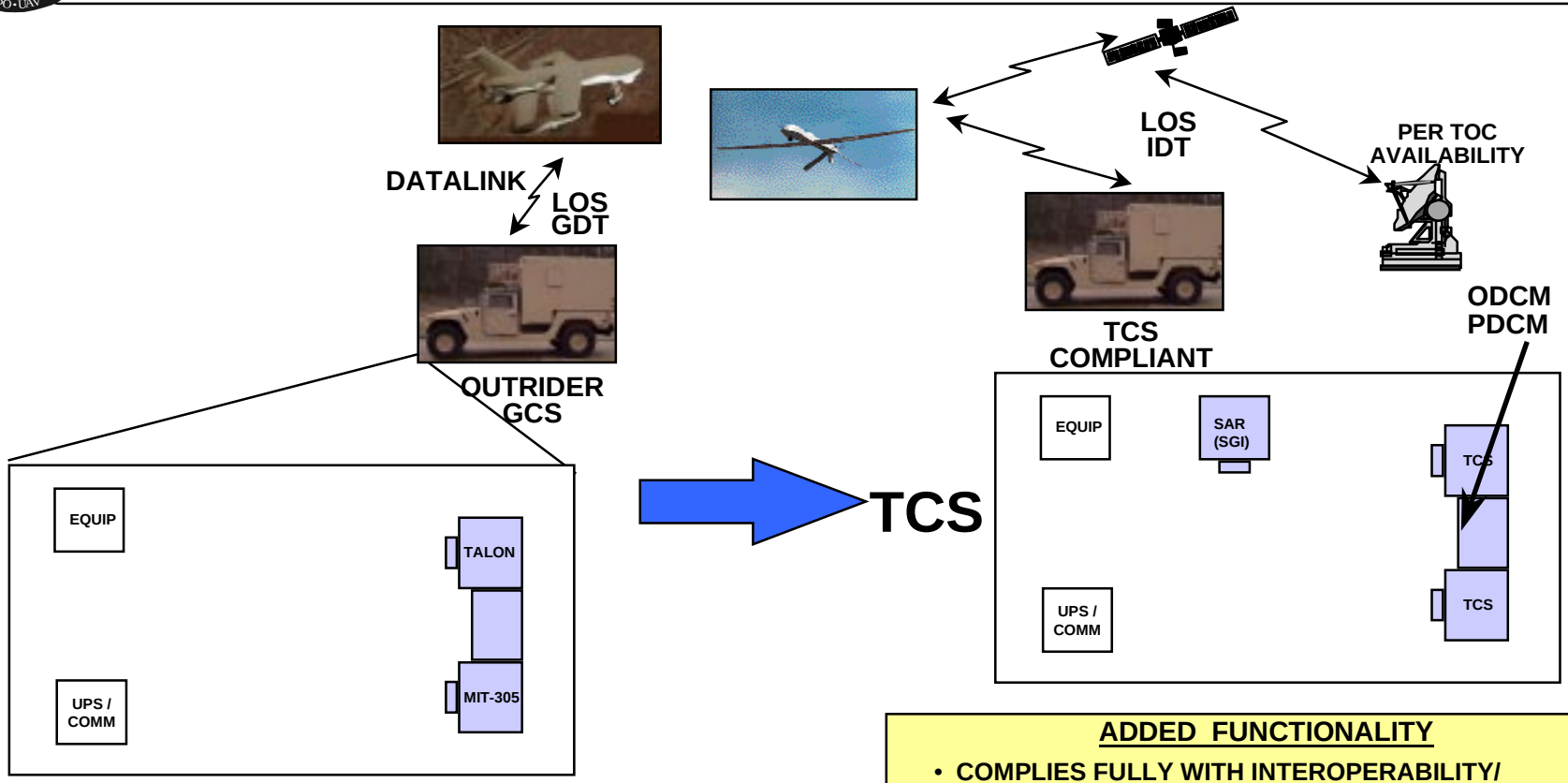

EXISTING OUTRIDER FUNCTIONALITY

- DATA RECEIPT
- PAYLOAD CONTROL
- VEHICLE CONTROL
- MANUAL TAKE OFF/LANDING
- DATA LINK CONTROL

ADDED FUNCTIONALITY

- COMPLIES FULLY WITH INTEROPERABILITY/ (MAE & TUAV LEVEL 5 CAPABILITY)
- ENHANCE CAPABILITY OF MAE GCS
  - FULLY COMPLIES WITH DOD ARCHITECTURE STANDARDS
  - C4I INTERCONNECTIVITY/INTEROPERABILITY
  - ENHANCED IMAGERY PROCESSING
  - IMPROVED FULLY INTEROPERABLE TCS MISSION PLANNER
  - INCREASED MISSION FLEXIBILITY
- LOS IDT PROVIDES RECEIPT OF PREDATOR, OUTRIDER, PIONEER, AND HUNTER

TCS PIONEER EXAMPLE

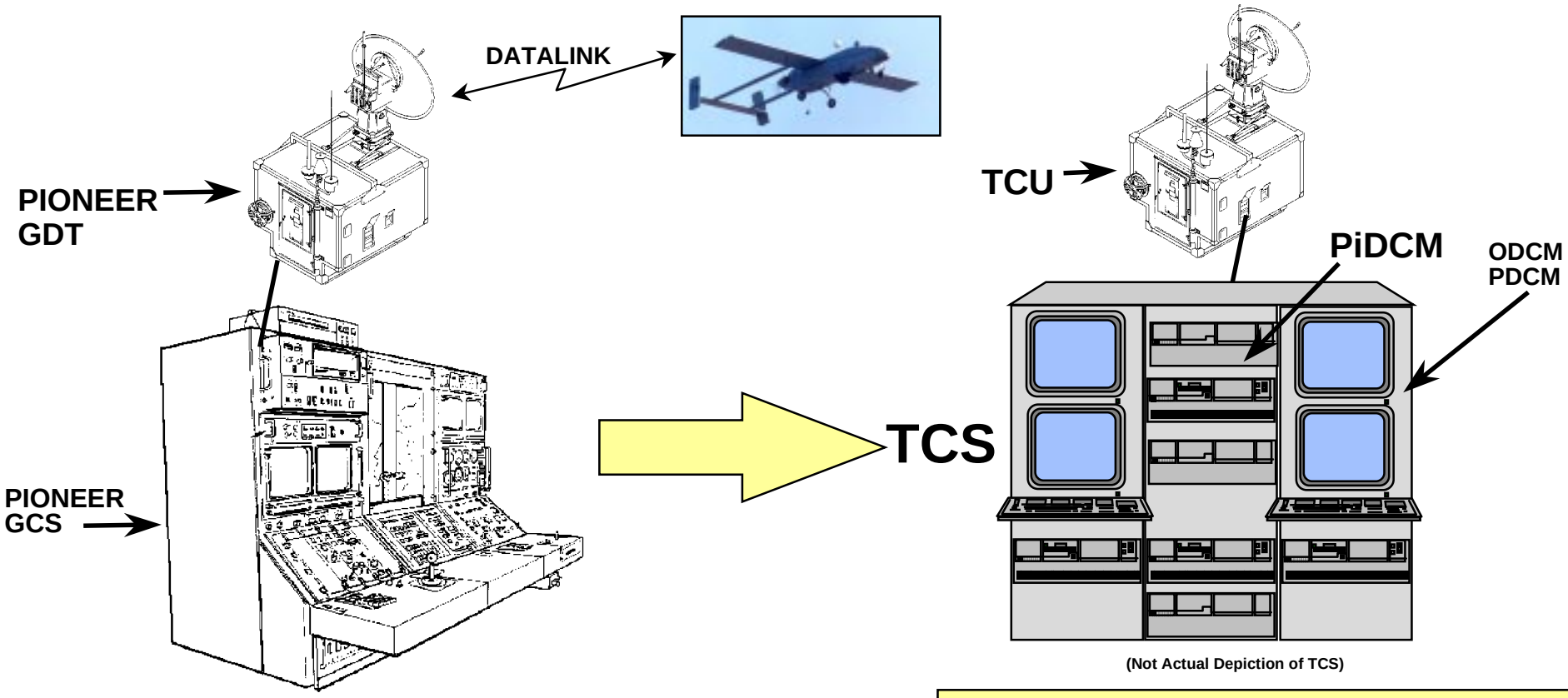

(Not Actual Depiction of TCS)

EXISTING OUTRIDER FUNCTIONALITY

- DATA RECEIPT
- PAYLOAD CONTROL
- VEHICLE CONTROL
- MANUAL TAKE OFF/LANDING
- AUTOMATED LANDING
- DATA LINK CONTROL

ADDED FUNCTIONALITY

- C4I CONNECTIVITY
- MISSION PLANNING
- AUTOMATIC TAKE OFF/LANDING
- PAYLOAD DATA DISSEMINATION
- COORDINATE GENERATION
- LOS IDT PROVIDES RECEIPT OF PREDATOR, OUTRIDER, PIONEER, AND HUNTER

PHASE II SYSTEMS

6 LRIP

LANDBASED

HMMWV

SEABASED

CV Battle Group

SEABASED

Amphibious Battle Group

TOC

Task Force Commander

PREDATOR

GCS

OUTRIDER

HMMWV

	ARMY/ MARINES	NAVY	AIR FORCE
Hardware	CHS X	TAC X	SUN/SGI
Software	Common Core AV Unique Payload Unique	Same	Same